EFAPEL®

ELECTRICAL SOLUTIONS

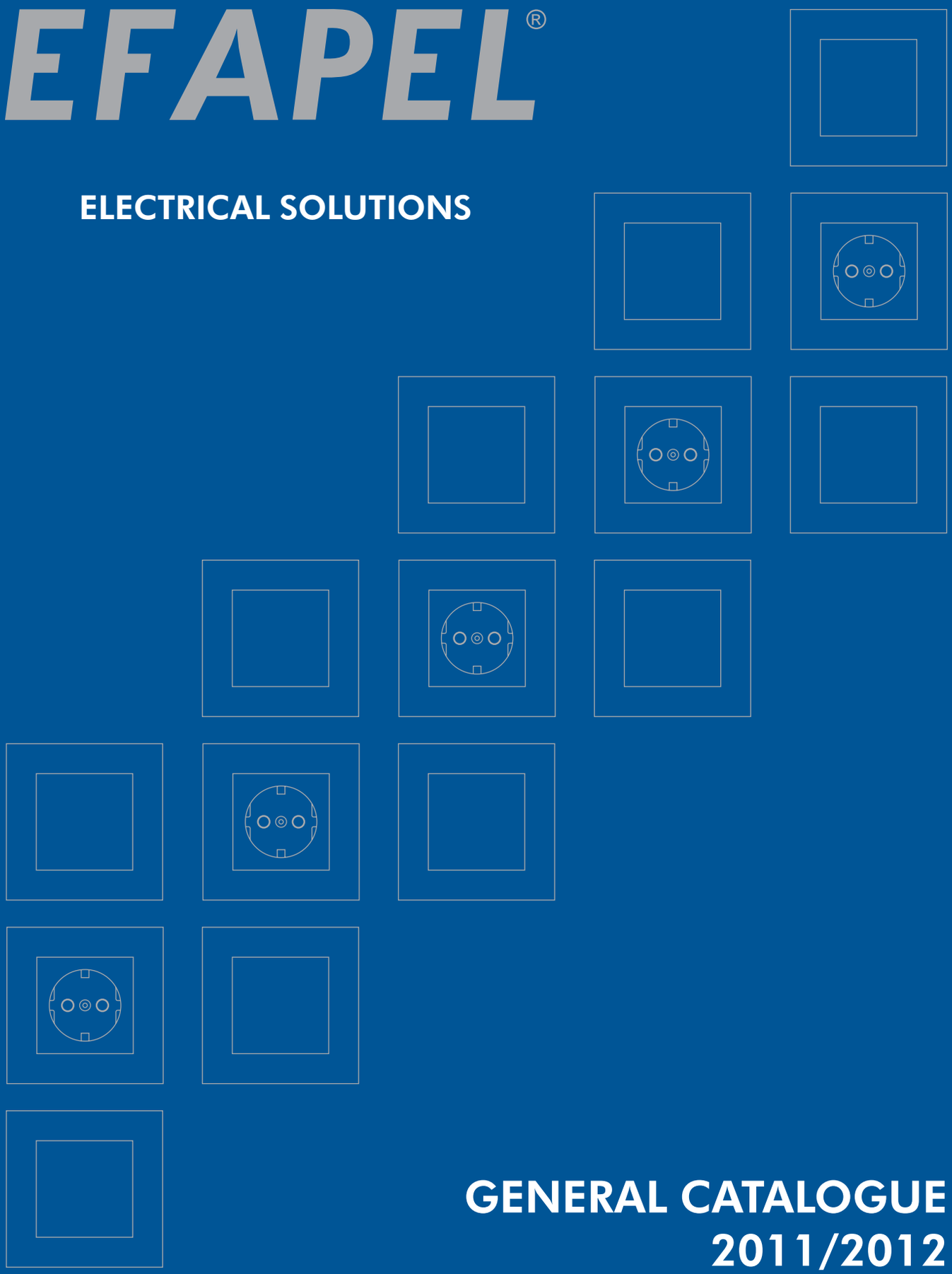

GENERAL CATALOGUE 2011/2012

catálogo 2/2011

EFAPEL - Empresa Fabril de Produtos Eléctricos, S.A.

PORTUGAL

		Page
FLUSH MOUNTING MECHANISMS	**MEC 21** Series	4
FLUSH MOUNTING DEVICES	**LOGUS 90** Series	6
	Sirius 70 Series	24
	APOLO 5000 Series	42
SURROUNDING SOUND SYSTEM	**Jazz Light** Series	62
WATERPROOF DEVICES	**WATERPROOF 48** Series	72
SURFACE MOUNTING DEVICES	**2600** Series	78
	3700 Series	82
CABLE-TRUNKINGS MOUNTING DEVICES	**QUADRO 45** Series	90
	47 Series	104
CABLE-TRUNKINGS	**10** Series - Cable-trunkings for Electrical and Telecommunications Installations	114
	16 Series - Distribution Modular Cable-trunkings	126
	13 Series - Trunkings for the Protection of Cables and Pipes	130
	14 Series - Trunkings for Electrical Panels	132
DATA, VOICE AND IMAGE	**DVI** Series	134
MODULAR PROTECTIONS AND DEVICES FOR ELECTRICAL PANELS	**MODUS 55** Series	142
	Accessories for Electrical Installations	156
	Annex (Wiring Diagrams, Technical Data Sheets, Product Certifications and Reference Index)	162

mec 21 series

ONLY ONE TYPE OF MECHANISM

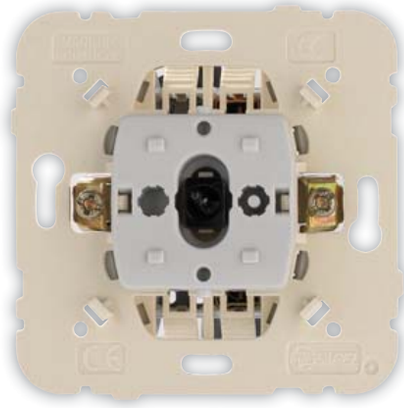

for all the
FLUSH MOUNTING SERIES

LOGUS90 SERIES

(Page 6)

sirius70 series

(Page 24)

APOLO 5000 series

(Page 42)

EFAPEL

How to **MOUNT** a **COMPLETE FLUSH MOUNTING DEVICE**

MECHANISM
MEC 21 Series

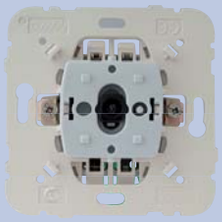

Ref. 21011

+

Frame
90 Series / 70 Series / 5000 Series

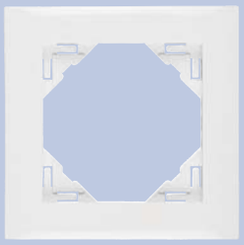

Ref. 90910 T**BR**
70910 T**BR**
50910 T**BR**

+

Rocker / Cover Plate
90 Series / 70 Series / 5000 Series

Ref. 90601 T**BR**
70601 T**BR**
50601 T**BR**

=

Complete Product

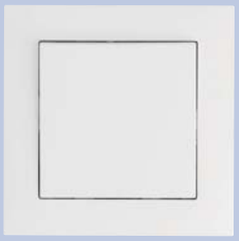

To order a product, you have to:

1) Select the Reference of:

- the **Mechanism** of the function that you need;
- the **Frame** of the choosen Series finishing;
- the **Rocker/Cover Plate** appliable to the choosen mechanism in the selected Series.

  Ex: 21011 + 90910 T**YY** + 90601 T**YY**

2) Choose the Finishing:

Add to the **Frame** and **Rocker/Cover Plate** references a two-letter suffix corresponding to the finishing you need.

FUNCTIONS (EXAMPLES)	Ref. **MECHANISM**	Ref. **FRAME**	Ref. **ROCKER/ COVER PLATE**
Single Pole Switch	21011	**XX**910 T**YY**	**XX**601 T**YY**
Motion Detector of 400W	21402	**XX**910 T**YY**	**XX**401 T**YY**
Two Circuits Switch	21061	**XX**910 T**YY**	**XX**611 T**YY**
Two-Way Switch	21071	**XX**910 T**YY**	**XX**601 T**YY**
Double Two-Way Switch	21101	**XX**910 T**YY**	**XX**611 T**YY**

NOTE:
"**XX**" - Replace by the corresponding number of the choosen series (LOGUS - **90**; Sirius - **70** and APOLO - **50**00).
"**YY**" - Replace by the corresponding two-letters suffix of the choosen finishing.

Single Pole Switch – CRYSTAL
CS - Cristal/Gray

The **LOGUS 90** Series is synonym of a **timeless design** and **exclusive materials**.

The modern spirit of the "**Top Series**" of EFAPEL inspires the creation of **unique and innovative spaces**.

Let your imagination flow with its **wide range of colours**: White, Ivory, Ice, Pearl, Aluminium and Gray, and with the **frames made with real and noble materials**: Crystal, Metal, Wood and Stone.

A small-big detail which will make the difference in your decoration.

FINISHINGS

BASE

BR - White

MF - Ivory

AQUARELLA

GE - Ice

PE - Pearl

AL - Aluminium

IS - Gray

CRYSTAL

CG - Cristal/Ice

CP - Cristal/Pearl

CA - Cristal/Aluminium

CS - Cristal/Gray

METALLO

TP - Titanium/Pearl

IA - Inox/Aluminium

OP - Gold/Pearl

QS - Nickel/Gray

US - Aluminium/Gray

RS - Chrome/Gray

ARBORE

FP - Beech Wood/Pearl

JP - Cherry Tree/Pearl

MS - Mahogany/Gray

NA - Walnut Tree/Aluminium

PETRA

GG - Granite/Ice

GP - Granite/Pearl

GA - Granite/Aluminium

GS - Granite/Gray

IP44

- The **IP44 Kit** for Mechanisms of **Single Rocker** (Ref. 21981) and **Double Rockers** (Ref. 21982) assures the Protection Degree of **IP44** to the mechanisms of the MEC 21 Series.

CONTROL DEVICES

	Ref.	Box (Un)
Single Pole Switch 10AX - 250V~	21011	10
Single Pole Switch with Orienting Light 10AX - 250V~ ▪ To control electronic energy-saving lamps, we recommend the use of capacitors of 0,15µF 275V~ connected in parallel to the load to avoid the blinking in the lamp when the contact is open. ▪ Replacement LED available on page 20.	21012	10
Single Pole Switch with Pilot Lamp 10AX - 250V~ ▪ Replacement LED available on page 20.	21013	10
Two-pole Switch 10AX - 250V~	21021	10
Two-pole Switch with Pilot Lamp 10AX - 250V~ ▪ Replacement LED available on page 20.	21023	10
Two-pole Switch with Pilot Lamp 20A 20A - 250V~ ▪ Replacement LED available on page 20.	21024	10
Motion Detector of 1000W ▪ Rated Voltage: 230V~ ± 10%; 50/60Hz. ▪ Sensibility Regulation. ▪ Range of Detection: 8 meters. ▪ Detection Angle: 160°. ▪ Inverter Contact (NO+NC), voltage free. ▪ Relay Output, compatible with all types of loads.	21401 eco	1
Motion Detector of 400W ▪ Rated Voltage: 230V~ ± 10%; 50/60Hz. ▪ Sensibility Regulation. ▪ Range of Detection: 8 meters. ▪ Detection Angle: 160°. ▪ Inverter Contact (NO+NC), voltage free. ▪ Relay Output, compatible with all types of loads.	21402 eco	1

ROCKERS AND COVER PLATES - BASE AND AQUARELLA

	Ref.	Colour	Box (Un)
Rocker for Switches	90601 T	BR MF GE PE AL IS	20 2
Rocker for Lighted Switches	90602 T	BR MF GE PE AL IS	20 2
Rocker for Lighted Switches / Push-button with Lamp Symbol	90797 T	BR MF GE PE AL IS	2
Rocker for Switches	90601 T	BR MF GE PE AL IS	20 2
Rocker for Two-pole Switch	90608 T	BR MF GE PE AL IS	2
Rocker for Lighted Switches	90602 T	BR MF GE PE AL IS	20 2
Rocker for Lighted Switches / Push-button with Lamp Symbol	90797 T	BR MF GE PE AL IS	2
Cover Plate for Motion Detectors	90401 T	BR MF GE PE AL IS	1

- **T** - Rocker, Cover Plate or Frame.
- **BR** - White; **MF** - Ivory; **GE** - Ice; **PE** - Pearl; **AL** - Aluminium; **IS** - Gray.
- eco - The products identified with this symbol improve the saving of energy and contribute to the the energy efficiency of the building.

CONTROL DEVICES

	Ref.	Cx (Un)
One Circuit Digital Clock Switch ▪ Rated Voltage: 230V~ - 50Hz. ▪ Breaking Capacity: 6A. ▪ Output Type: ON, OFF and IMPULSE.	21046 eco	1
Two Circuits Digital Clock Switch ▪ Rated Voltage: 230V~ - 50Hz. ▪ Breaking Capacity: 6A + 6A. ▪ Output Type: ON, OFF and IMPULSE.	21047 eco	1
Card-system Switch 10AX - 250V~ ▪ For ATM Card Type (Ref. 21999). ▪ To control electronic energy-saving lamps, we recommend the use of capacitors of 0,15μF 275V~ connected in parallel to the load to avoid the blinking in the lamp when the contact is open.	21031 eco	10
Two Circuits Switch 10AX - 250V~	21061	10
Two Circuits Switch 20A 20A - 250V~	21065	10
Three Circuits Switch 16AX - 250V~	21088	10
Two-way Switch 10AX - 250V~	21071	10
Two-way Switch with Orienting Light 10AX - 250V~ ▪ To control electronic energy-saving lamps, we recommend the use of capacitors of 0,15μF 275V~ connected in parallel to the load to avoid the blinking in the lamp when the contact is open. ▪ Replacement LED available on page 20.	21072	10
Two-way Switch with Pilot Lamp 10AX - 250V~ ▪ Replacement LED available on page 20.	21073	10

ROCKERS AND COVER PLATES - BASE AND AQUARELLA

	Ref.	Colour	Box (Un)
Cover Plate for One Circuit Digital Clock Switch	90046 T	BR MF GE PE AL IS	1
Cover Plate for Two Circuits Digital Clock Switch	90047 T	BR MF GE PE AL IS	1
Cover Plate for Card-system Switch	90731 T	BR MF GE PE AL IS	2
Double Rockers (Pair)	90611 T	BR MF GE PE AL IS	20 2
Triple Rockers (Three)	90661 T	BR MF GE PE AL IS	20 2
Rocker for Switches	90601 T	BR MF GE PE AL IS	20 2
Rocker for Lighted Switches	90602 T	BR MF GE PE AL IS	20 2

- **T** - Rocker, Cover Plate or Frame.
- **BR** - White; **MF** - Ivory; **GE** - Ice; **PE** - Pearl; **AL** - Aluminium; **IS** - Gray.
- eco - The products identified with this symbol improve the saving of energy and contribute to the the energy efficiency of the building.

CONTROL DEVICES

	Ref.	Box (Un)
Two-way Switch 20A 20A - 250V~	21075	10
Double Two-way Switch 10AX - 250V~	21101	10
Double Two-way Switch 20A 20A - 250V~	21103	10
Intermediate Switch 10A - 250V~	21051	10
Intermediate Switch with Orienting Light 10AX - 250V~ ▪ To control electronic energy-saving lamps, we recommend the use of capacitors of 0,15µF 275V~ connected in parallel to the load to avoid the blinking in the lamp when the contact is open. ▪ Replacement LED available on page 20.	21052	10
Rocker Push-button 10A - 250V~	21151	10
NEW Rocker Push-button (NO+NC) 10A - 250V~	21150	10

ROCKERS AND COVER PLATES - BASE AND AQUARELLA

	Ref.	Colour	Box (Un)
Rocker for Switches	90601 T	BR MF GE PE AL IS	20 2
Double Rockers (Pair)	90611 T	BR MF GE PE AL IS	20 2
Rocker for Switches	90601 T	BR MF GE PE AL IS	20 2
Rocker for Lighted Switches	90602 T	BR MF GE PE AL IS	20 2
Rocker for Switches	90601 T	BR MF GE PE AL IS	20 2
Rocker for Switches with Lock Symbol	90604 T	BR MF GE PE AL IS	2
Rocker for Switches with Bell Symbol	90605 T	BR MF GE PE AL IS	2
Rocker for Switches with Maid Symbol	90606 T	BR MF GE PE AL IS	2
Rocker for Switches with Lamp Symbol	90607 T	BR MF GE PE AL IS	2

▪ **T** - Rocker, Cover Plate or Frame.
▪ **BR** - White; **MF** - Ivory; **GE** - Ice; **PE** - Pearl; **AL** - Aluminium; **IS** - Gray.

CONTROL DEVICES

	Ref.	Box (Un)
Rocker Push-button with Orienting Light (250V) 10A - 250V~ ▪ Replacement LED available on page 20.	21152	10
Rocker Push-button with Orienting Light (12V) 6A - 12V ▪ Replacement LED available on page 20.	21162	10
NEW Rocker Push-button with Independent Pilot Lamp 10A - 250V~ ▪ Replacement LED available on page 20.	21153	10
Rocker Push-button with Identification (250V) 10A - 250V~	21155	10
Rocker Push-button with Identification (12V) 6A - 12V	21165	10
Double Push-button 10A - 250V~	21156	10
NEW Double Push-button (2NO+2NC) 10A - 250V~	21154	10
Rocker Push-button / Two-way Switch 10A - 250V~	21159	10

ROCKERS AND COVER PLATES - BASE AND AQUARELLA

	Ref.	Colour	Box (Un)
Rocker for Lighted Switches	90602 T	BR MF GE PE AL IS	20 2
Rocker for Lighted Switches / Push-Button with Lock Symbol	90794 T	BR MF GE PE AL IS	2
Rocker for Lighted Switches / Push-Button with Bell Symbol	90795 T	BR MF GE PE AL IS	2
Rocker for Lighted Switches / Push-Button with Maid Symbol	90796 T	BR MF GE PE AL IS	2
Rocker for Lighted Switches / Push-Button with Lamp Symbol	90797 T	BR MF GE PE AL IS	2
Rocker for Switches with Identification Card	90603 T	BR MF GE PE AL IS	2
Double Rockers (Pair)	90611 T	BR MF GE PE AL IS	20 2

- **T** - Rocker, Cover Plate or Frame.
- **BR** - White; **MF** - Ivory; **GE** - Ice; **PE** - Pearl; **AL** - Aluminium; **IS** - Gray.

CONTROL DEVICES

	Ref.	Box (Un)
Venetian Switch 10A - 250V~ ▪ Switch function. ▪ Electrical and Mechanical Blockade against the appearance of two simultaneous orders. ▪ Toggles automatically one rocker when the other is pressed.	21290	10
Venetian Switch with Mechanical Blockage 10A - 250V~ ▪ Switch function. ▪ Electrical and Mechanical Blockade against the appearance of two simultaneous orders. ▪ It is necessary to press "STOP" before changing the sense of the movement.	21291	10
General Blinds Control Module with Infrared Remote Control ▪ Rated Voltage: 230V~ - 50Hz. ▪ Breaking Capacity: 6A. ▪ Remote control through an IR transmitter (Ref. 81901) or locally by using push-buttons. ▪ 2 programmable functions (Up/Down). ▪ Function: "Standby".	21311 eco	1
Local Blinds Control Module with Infrared Remote Control ▪ Rated Voltage: 230V~ - 50Hz. ▪ Breaking Capacity: 6A. ▪ Remote control through an IR transmitter (Ref. 81901) or locally by using push-buttons.	21312 eco	1
Venetian Double Push-button 10A - 250V~ ▪ Push-button function. ▪ Electrical and Mechanical Blockade against the appearance of two simultaneous orders.	21281	10
Venetian Double Push-button for multiple points Blinds Control 10A - 250V~ ▪ Push-button function. ▪ Electrical and Mechanical Blockade against the appearance of two simultaneous orders.	21283	10

ROCKERS AND COVER PLATES - BASE AND AQUARELLA

	Ref.	Colour	Box (Un)
Rockers for Venetian Switch (Pair)	90613 T	BR MF GE PE AL IS	20 2
Cover Plate for General Blinds Control Module with Infrared Remote Control	90311 T	BR MF GE PE AL IS	1
Cover Plate for Local Blinds Control Module with Infrared Remote Control	90312 T	BR MF GE PE AL IS	1
Rockers for Venetian Push-buttons (Pair)	90612 T	BR MF GE PE AL IS	20 2

- **T** - Rocker, Cover Plate or Frame.
- **BR** - White; **MF** - Ivory; **GE** - Ice; **PE** - Pearl; **AL** - Aluminium; **IS** - Gray.
- eco - The products identified with this symbol improve the saving of energy and contribute to the the energy efficiency of the building.

CONTROL DEVICES

	Ref.	Box (Un)
Rotary Two-way Switch 16A 16AX - 250V~	21301	10
Rotary Push-button16A 16A - 250V~	21303	10
Key-lock Two-way Switch 10AX - 250V~	21352	1
Key-lock Push-button 10A - 250V~	21351	1
Pull-cord Two-way Switch 10AX - 250V~	21092	10
Pull-cord Push-button 10A - 250V~	21091	10
Rotary Switch 16A 16AX - 250V~	21302	10
Dimmer / Two-way Switch of 500W ▪ **40-500W** - 230V~ - 50Hz incandescent and halogen lamps. ▪ **100-400W** - 12/24V~ low voltage halogen lamps connected through magnetic lighting transformers.	21211 eco	1
Electronic Dimmer / Two-way Switch of 320W ▪ **5-320W** - 230V~ - 50Hz incandescent and halogen lamps. ▪ 12/24V~ low voltage halogen lamps and bulbs connected through electronic lighting transformers.	21212 eco	1

ROCKERS AND COVER PLATES - BASE AND AQUARELLA

	Ref.	Colour	Box (Un)
Cover Plate for Rotary Push-button / Two-way Switch	90761 T	BR MF GE PE AL IS	2
Cover Plate for Key-lock Push-button/ Two-way Switch	90351 T	BR MF GE PE AL IS	1
Cover Plate for Pull-cord Push-button/ Two-way Switch **Note:** **With protection against pulling with excessive force.**	90741 T	BR MF GE PE AL IS	2
Cover Plate for Rotary Switch (ON/OFF)	90762 T	BR MF GE PE AL IS	2
Cover Plate for Dimmer/ Two-way Switch	90721 T	BR MF GE PE AL IS	2 1

▪ **T** - Rocker, Cover Plate or Frame.
▪ **BR** - White; **MF** - Ivory; **GE** - Ice; **PE** - Pearl; **AL** - Aluminium; **IS** - Gray.
▪ eco - The products identified with this symbol improve the saving of energy and contribute to the the energy efficiency of the building.

CONTROL DEVICES

	Ref.	Box (Un)
NEW Programmable Chrono-Thermostat ▪ Rated Voltage: 230V~ - 50Hz. ▪ Breaking Capacity: 16A. ▪ Inverter Contact (NO+NC), voltage free. ▪ Room Temperature Read-out from 0 to 35°C. ▪ It is possible to connect to a floor temperature sensor.	21232 eco	1
Room Thermostat with Infrared Remote Control NEW ▪ Rated Voltage: 230V~ - 50Hz. ▪ Breaking Capacity: 16A. ▪ Inverter Contact (NO+NC), voltage free. ▪ Room Temperature Read-out from 0 to 35°C. ▪ Remote control through an IR transmitter (Ref. 81902) or locally by using push-buttons. ▪ It is possible to connect to a floor temperature sensor.	21233 eco	1
Floor Temperature Sensor for Programmable Chrono-Thermostat and Room Thermostat with Infrared Remote Control NEW ▪ Length: 4m. ▪ Range: from 0 to 70°C. ▪ IP67	81950	1

ROCKERS AND COVER PLATES - BASE AND AQUARELLA

	Ref.	Colour	Box (Un)
Cover Plate for Programmable Chrono-Thermostat	90740 T	BR MF GE PE AL IS	1
Cover Plate for Room Thermostat with Infrared Remote Control	90742 T	BR MF GE PE AL IS	1

DATA SOCKETS

	Ref.	Box (Un)
Single RJ45 Cat. 6 UTP Computer Socket (Supply with Connector)	21455	10
Single RJ45 Cat. 6 STP Computer Socket (Supply with Connector)	21445	10
Single RJ45 Cat. 5e UTP Computer Socket (Supply with Connector)	21453	10
Single RJ45 Cat. 5e STP Computer Socket (Supply with Connector)	21443	10
RJ45 Cat. 6 UTP Connector (250 MHz)	21978	5
RJ45 Cat. 5e UTP Connector (100 MHz)	21975	20
RJ45 Cat. 6 STP Connector (250 MHz)	21988	5
RJ45 Cat. 5e STP Connector (100 MHz)	21985	5

ROCKERS AND COVER PLATES - BASE AND AQUARELLA

	Ref.	Colour	Box (Un)
Cover Plate for Single RJ45 Computer Sockets	90751 T	BR MF GE PE AL IS	20 2
NEW Cover Ring with Double Support for RJ45 Connectors	90442 S	BR MF GE PE AL IS	10 5

- **T** - Rocker, Cover Plate or Frame; **S** - Semi-assembled.
- **BR** - White; **MF** - Ivory; **GE** - Ice; **PE** - Pearl; **AL** - Aluminium; **IS** - Gray.
- eco - The products identified with this symbol improve the saving of energy and contribute to the the energy efficiency of the building.

COUPLERS FOR FIBRE OPTIC CONNECTORS

		Ref.	Box (Un)
	Coupler for SC APC Duplex Fibre Optic Connector NEW	82211	10
	Coupler for SC APC Simplex Fibre Optic Connector NEW	82210	10
	Coupler for LC Duplex Fibre Optic Connector NEW	82213	10

ROCKERS AND COVER PLATES - BASE AND AQUARELLA

		Ref.	Colour	Box (Un)
	Cover Plate for Coupler for SC APC Duplex Fibre Optic Connector	90448 S	BR MF GE PE AL IS	10 2
	Cover Plate for Coupler for SC APC Simplex / LC Duplex Fibre Optic Connector	90449 S	BR MF GE PE AL IS	10 2

TELEPHONE SOCKETS

		Ref.	Colour	Box (Un)
50V ⎓ 70V~				
	Telephone Socket (RITA)	21251 S	BR MF CZ AT	10
	Telephone Socket (4 Conductors)	21252 S	BR MF CZ AT	10
	Telephone Socket (6 Conductors)	21253 S	BR MF CZ AT	10
8 contacts				
	T8 French Telephone Socket	21411	—	10

ROCKERS AND COVER PLATES - BASE AND AQUARELLA

		Ref.	Colour	Box (Un)
	Cover Plate for Telephone Socket	90712 T	BR MF GE PE AL IS	20 2
	Cover Plate for T8 French Telephone Socket	90718 T	BR MF GE PE AL IS	20 2

Note: For the Cover Plates of the AQUARELLA Finishing, please use the mechanism in the following colours: - **GE** (Ice) — **BR** (White);
- **PE** (Pearl) — **MF** (Ivory);
- **AL** (Aluminium) — **CZ** (Grey);
- **IS** (Gray) — **AT** (Anthracite)

NEW RANGE

RADIO, TELEVISION AND SATELLITE SOCKETS

	Ref.	Box (Un)
STAR CONNECTION		
R - TV - SAT Socket for Star Connection ▪ 4 - 862 MHz: < 1dB. ▪ 950 - 2400 MHz: < 3dB. ▪ Current Flow of 600 mA (DC) Max.	21543	10
R - TV Socket for Star Connection ▪ 4 - 82 MHz: < 1dB. ▪ 84 - 108 MHz: < 2dB. ▪ 112 - 1000 MHz: < 1dB.	21533	10
SERIES CONNECTION		
R - TV - SAT Socket (Terminal Type) ▪ 4 - 2400 MHz: < 5dB. ▪ Current Flow of 500 mA (DC) Max.	21555	10
R - TV - SAT Socket (Crossover Type) ▪ 4 - 2400 MHz: < 9dB. ▪ Current Flow of 500 mA (DC) Max. ▪ Insertion Losses: 2dB.	21565	10
R - TV Socket (Terminal Type) ▪ 4 - 82 MHz: < 5dB. ▪ 84 - 108 MHz: < 6dB. ▪ 112 - 1000 MHz: < 5dB.	21554	10
R - TV Socket (Crossover Type) ▪ 4 - 1000 MHz: < 9dB. ▪ Insertion Losses: 2dB.	21564	10

ROCKERS AND COVER PLATES - BASE AND AQUARELLA

	Ref.	Colour	Box (Un)
Cover Plate for R - TV - SAT Sockets	90775 T	BR MF GE PE AL IS	10 5
Cover Plate for R - TV Sockets	90776 T	BR MF GE PE AL IS	10 5
Cover Plate for R - TV - SAT Sockets	90775 T	BR MF GE PE AL IS	10 5
Cover Plate for R - TV Sockets	90776 T	BR MF GE PE AL IS	10 5

- **T** - Rocker, Cover Plate or Frame.
- **BR** - White; **MF** - Ivory; **GE** - Ice; **PE** - Pearl; **AL** - Aluminium; **IS** - Gray.

NEW RANGE

MULTIMEDIA SOCKETS

STAR CONNECTION

	Ref.[a]	Cx (Un)
R - TV - SAT - RJ45 Cat. 6 UTP - FO SC-APC Multimedia Socket for Star Connection ▪ 4 - 862 MHz: < 1dB. ▪ 950 - 2400 MHz: < 3dB. ▪ Current Flow of 500 mA (DC) Max.	21545	10
R - TV - SAT - RJ45 Cat. 6 UTP Multimedia Socket for Star Connection ▪ To be used with a Fibre Optic connector type SC APC Simplex or LC Duplex Fibre Optic connectors (page 136). ▪ 4 - 862 MHz: < 1dB. ▪ 950 - 2400 MHz: < 3dB. ▪ Current Flow of 500 mA (DC) Max.	21544	10
R - TV - SAT - 2xRJ45 Cat. 6 UTP Multimedia Socket for Star Connection ▪ 4 - 862 MHz: < 1dB. ▪ 950 - 2400 MHz: < 3dB. ▪ Current Flow of 500 mA (DC) Max.	21546	10
R - TV - RJ45 Cat. 6 UTP - FO SC-APC Multimedia Socket for Star Connection ▪ 4 - 82 MHz: < 1dB. ▪ 84 - 108 MHz: < 2dB. ▪ 112 - 1000 MHz: < 1dB.	21535	10
R - TV - RJ45 Cat. 6 UTP Multimedia Socket for Star Connection ▪ 4 - 82 MHz: < 1dB ▪ 84 - 108 MHz: < 2dB ▪ 112 - 1000 MHz: < 1dB	21534	10

ROCKERS AND COVER PLATES - BASE AND AQUARELLA

	Ref.	Colour	Box (Un)
Cover Plate for R - TV - SAT - RJ45 / R - TV - SAT - RJ45 - FO Multimedia Sockets	90770 T	BR MF GE PE AL IS	10 5
Cover Plate for R - TV - SAT - 2xRJ45 Multimedia Socket	90773 T	BR MF GE PE AL IS	10 5
Cover Plate for R - TV - RJ45 / R - TV - RJ45 - FO Multimedia Sockets	90774 T	BR MF GE PE AL IS	10 5

ENERGY SOCKETS

	Ref.	Box (Un)
NEW Earth Socket (Schuko Type) with Screwless Terminals 16A - 250V~	21130	10
Earth Socket (Schuko Type) 16A - 250V~	21131	10
Single Phase Socket 16A - 250V~	21121	10
NEW EarthSocket (French Type) with Screwless Terminals 16A - 250V~	21110	10
Earth Socket (French Type) 16A - 250V~	21111	10
Earth Socket (Euro-USA Type) 15A - 127V~ / 16A - 250V~	21140	10
NEW Earth Socket (Saudi Type) 15A - 127V~	21143	10

ROCKERS AND COVER PLATES - BASE AND AQUARELLA

	Ref.	Colour	Box (Un)
Safety Cover Plate for Earth Socket (Schuko Type)	90632 T	BR MF LR VD VM GE PE AL IS	20 2
Cover Plate for Earth Socket (Schuko Type)	90631 T	BR MF LR VD VM GE PE AL IS	20 2
Cover Plate for Schuko Socket with Safety and Hinged Lid (**IP44**) IP44	90634 T	BR MF VM GE PE AL IS	20 2
Safety Cover Plate for Single Phase Socket	90622 T	BR MF GE PE AL IS	20 2
Cover Plate for Single Phase Socket	90621 T	BR MF GE PE AL IS	20 2
Safety Cover Plate for Earth Socket (French Type)	90652 T	BR MF LR VD VM GE PE AL IS	20 2
NEW Cover Plate for French Socket with Safety and Hinged Lid (**IP44**) IP44	90654 T	BR MF GE PE AL IS	20 2
Safety Cover Plate for Earth Socket (Euro-USA Type)	90842 T	BR MF LR VD VM GE PE AL IS	20 2
Cover Plate for Earth Socket (Euro-USA Type)	90841 T	BR MF LR VD VM GE PE AL IS	20 2
Safety Cover Plate for Earth Socket (Saudi Type)	90843 T	BR MF LR VD VM GE PE AL IS	20 10

- **T** - Rocker, Cover Plate or Frame.
- **BR** - White; **MF** - Ivory; **GE** - Ice; **PE** - Pearl; **AL** - Aluminium; **IS** - Gray; **LR** - Orange; **VD** - Green; **VM** - Red.

OTHER PRODUCTS

	Ref.	Box (Un)
Three Wall Rose ▪ 3x2,5mm² - 250V~.	21173	10
Four Wall Rose ▪ 4x2,5mm² - 250V~.	21174	10
Pilot Light ▪ Máx. 5W (E14) 250V~. ▪ To be used with Lamp Ref. 81012 (page 158).	21360	10
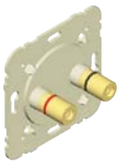 NEW Screw Terminal Loudspeaker Socket	21220	4
Support for Blind Cover	21222	10

ROCKERS AND COVER PLATES - BASE AND AQUARELLA

	Ref.	Colour	Box (Un)
Cover Plate for Wall Roses	90671 T	BR MF GE PE AL IS	20 2
Transparent Cover for Pilot Light	90781 T	IC LR VD VM	2
Cover Plate for Screw Terminal Loudspeaker Socket	90713 T	BR MF GE PE AL IS	4 2
Blind Cover Plate	90677 T	BR MF GE PE AL IS	10 2

ACCESSORIES

	Ref.	Colour	Box (Un)
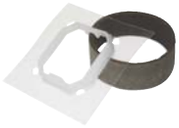 **IP44** Kit for MEC 21 Mechanisms - Single Rocker IP44	21981	—	5
IP44 Kit for MEC 21 Mechanisms - Double Rockers IP44	21982	—	5
Surface Mounting Box for LOGUS 90 Series ▪ To be used in installations with **trunkings of 10 and 16 Series**.	10976 A	BR MF	10
Cover for Mechanisms Protection	21971	—	40
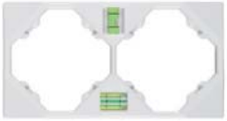 Level and Mounting Accessory for MEC 21 Mechanisms	21989	—	2

▪ **T** - Rocker, Cover Plate or Frame; **A** - Accessory.
▪ **BR** - White; **MF** - Ivory; **GE** - Ice; **PE** - Pearl; **AL** - Aluminium; **IS** - Gray; **IC** - Colourless; **LR** - Orange; **VD** - Green; **VM** - Red.

ACCESSORIES

	Ref.	Colour	Box (Un)
Card for Card-system Switch	21999	—	20
Universal Cover Ring / Adaptor for 45x45 Modules	90881 T	BR MF VM GE PE AL IS	5 2
Replacement LED for Lighted Mechanisms of MEC 21 / 48 Series - 250V~ ▪ 110/250V~	81019	—	10
Replacement LED for Lighted Mechanisms of MEC 21 / 48 Series - 12V ▪ 12V	81018	—	10
Automatic Relay for Blinds Control ▪ Rated Voltage: 230V~ - 50Hz. ▪ Breaking Capacity: 6A. ▪ Temporized. ▪ Connect to the Double Push-buttons and to Venetian Double Push-buttons.	81512	—	1
Relay for Blinds Control ▪ Rated Voltage: 230V~ - 50Hz. ▪ Breaking Capacity: 6A. ▪ No Temporized. ▪ Connect locally to Venetian Double Push-button (Ref. 21283). ▪ For the centralized command of the installation, connect remotely to a Venetian Double Push-button (Ref. 21283).	81511	—	1
Infrared Remote Control Transmitter for Blinds Control ▪ 4 groups of Buttons with 2 programmable functions. ▪ It works with 2 AAA batteries, not included.	81901	—	1
Infrared Remote Control Transmitter for Room Thermostat ▪ It works with 2 AAA batteries, not included.	81902	—	1
Blind Face Plate ▪ To be used with F Type Coaxial connectors (page 136).	45970 S	BR MF GE PE AL IS	5 2

SEMI - ASSEMBLED DEVICES (Without Connectors)

	Ref.	Colour	Box (Un)
Double RJ45 Computer Socket **Note:** To be used with RJ45 Connectors of the DVI Series (page 136).	90450 S	BR MF GE PE AL IS	10 2

▪ **T** - Rocker, Cover Plate or Frame; **S** - Semi-assembled.
▪ **BR** - White; **MF** - Ivory; **GE** - Ice; **PE** - Pearl; **AL** - Aluminium; **IS** - Gray; **VM** - Red.

COMPLETE DEVICES

	Ref.	Colour	Box (Un)
Monoblock Safety Earth Socket (Schuko Type) with Screwless Terminals **NEW** 16A - 250V~	90139 C	BR MF GE PE AL IS	10
Monoblock Safety Earth Socket (Schuko Type) 16A - 250V~	90138 C	BR MF GE PE AL IS	10
Monoblock Earth Socket (Schuko Type) 16A - 250V~	90135 C	BR MF GE PE AL IS	10
Monoblock Double Safety Earth Socket (Schuko Type) 16A - 250V~	90332 C	BR MF GE PE AL IS	10 2
Monoblock Double Earth Socket (Schuko Type) 16A - 250V~	90331 C	BR MF GE PE AL IS	10 2
Earth Socket (British Type) **NEW** 13A - 250V~	90184 C	BR MF GE PE AL IS	10 2
Earth Socket (British Type) with Pilot Lamp 13A - 250V~	90183 C	BR MF GE PE AL IS	10 2
Double Earth Socket (British Type) **NEW** 13A - 250V~	90344 C	BR MF GE PE AL IS	5 2
Double Earth Socket (British Type) with Pilot Lamp 13A - 250V~	90343 C	BR MF GE PE AL IS	5 2
Dimmer / Two-way Switch of 500W ▪ **40 - 500W** - 230V~ - 50Hz incandescent and halogen lamps. ▪ **100 - 400W** - 12/24V~ low voltage halogen lamps connected through magnetic lighting transformers.	90211 C eco	BR MF GE PE AL IS	1
Electronic Dimmer / Two-way Switch of 320W ▪ **5-320W** - 230V~ - 50Hz incandescent and halogen lamps. ▪ 12/24V~ low voltage halogen lamps and bulbs connected through electronic lighting transformers.	90212 C eco	BR MF GE PE AL IS	1

- **C** - Complete Device.
- **BR** - White; **MF** - Ivory; **GE** - Ice; **PE** - Pearl; **AL** - Aluminium; **IS** - Gray.
- eco - The products identified with this symbol improve the saving of energy and contribute to the the energy efficiency of the building.

FRAMES

Horizontal Mounting or Vertical Mounting

	Single Frame			Double Frame			Triple Frame		
	Ref.	Colour	Box (Un)	Ref.	Colour	Box (Un)	Ref.	Colour	Box (Un)
BASE	90910 T	BR MF	20	90920 T	BR MF	10	90930 T	BR MF	10
AQUARELLA	90910 T	GE PE AL IS	2	90920 T	GE PE AL IS	2	90930 T	GE PE AL IS	2
CRYSTAL	90910 T	CG CP CA CS	1	90920 T	CG CP CA CS	1	90930 T	CG CP CA CS	1
METALLO	90910 T	TP IA OP QS US RS	1	90920 T	TP IA OP QS US RS	1	90930 T	TP IA OP QS US RS	1
ARBORE	90910 T	FP JP MS NA	1	90920 T	FP JP MS NA	1	90930 T	FP JP MS NA	1
PETRA 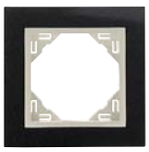	90910 T	GG GP GA GS	1	90920 T	GG GP GA GS	1	90930 T	GG GP GA GS	1

- **T** - Rocker, Cover Plate or Frame.
- **BASE**: **BR** - White; **MF** - Ivory.
- **AQUARELLA**: **GE** - Ice; **PE** - Pearl; **AL** - Aluminium; **IS** - Gray.
- **CRYSTAL**: **CG** - Cristal/Ice; **CP** - Cristal/Pearl; **CA** - Cristal/Aluminium; **CS** - Cristal/Gray.

Four-Gang Frame			Five-Gang Frame			Monoblock Cover for Safety Earth Socket (Shuko Type)			Monoblock Cover for Earth Socket (Shuko Type)			Monoblock Cover for Safety Earth Socket (French Type)		
Ref.	Colour	Box (Un)	Ref.	Colour	Box (Un)	Ref.	Colour	Box (Un)	Ref.	Colour	Box (Un)	Ref.	Colour	Box (Un)
90940 T	BR MF	2	90950 T	BR MF	2	90903 T	BR MF	20	90902 T	BR MF	20	90904 T	BR MF	20
90940 T	GE PE AL IS	2	90950 T	GE PE AL IS	2	90903 T	GE PE AL IS	2	90902 T	GE PE AL IS	2	90904 T	GE PE AL IS	2
90940 T	CG CP CA CS	1												
90940 T	TP IA OP QS US RS	1												
90940 T	FP JP MS NA	1												
90940 T	GG GP GA GS	1												

- Due to the **squared symmetry** of the **LOGUS 90 Series**, **all the frames can be mounted in horizontal or vertical position**.

- The **CRYSTAL**, **METALLO**, **ARBORE** and **PETRA** finishings use the same rockers and cover plates of the **AQUARELLA** finishing (Ice, Pearl, Aluminium or Gray colours) (see page 7).

- **T** - Rocker, Cover Plate or Frame.
- **METALLO**: **TP** - Titanium/Pearl; **IA** - Inox/Aluminium; **OP** - Gold/Pearl; **QS** - Nickel/Gray; **US** - Aluminium/Gray; **RS** - Chrome/Gray.
- **ARBORE**: **FP** - Beech Wood/Pearl; **JP** - Cherry Tree/Pearl; **MS** - Mahogany/Gray; **NA** - Walnut Tree/Aluminium.
- **PETRA**: **GG** - Granite/Ice; **GP** - Granite/Pearl; **GA** - Granite/Aluminium; **GS** - Granite/Gray.

Single Pole Switch – CLASSIC
MF - Ivory

The **Sirius 70 Series** highlights is its **clean design**.

The combination of the **neutral colours** of the **rockers and cover plates** with the **textures of the frames** makes the **Sirius 70 Series** the ideal choice to create **spaces with personality**.

The **rockers and cover plates** of this series are in White, Ivory and Anthracite and has a diversity of colours and **textures in the frames**: White, Ivory, Yellow, Green, Blue, Gold, Inox, Beech Wood, Cherry Tree, Mahogany and Walnut Tree.

FINISHINGS

CLASSIC

BR - White

MF - Ivory

AT - Anthracite

AMBIENT

BB - White/White

MM - Ivory/Ivory

BM - White/Ivory

BZ - White/Blue

BA - White/Yellow

BV - White/Green

METAL

BI - White/Inox

MI - Ivory/Inox

AI - Anthracite/Inox

BO - White/Gold

MO - White/Gold

AO - Anthracite/Gold

WOOD

BF - White/Beech Wood

BG - White/Mahogany

MA - Ivory/Beech Wood

MG - Ivory/Mahogany

AF - Anthracite/Beech Wood

AG - Anthracite/Mahogany

BC - White/Cherry Tree

BN - White/ Walnut Tree

MC - Ivory/Cherry Tree

MN - Ivory/Walnut Tree

AC - Anthracite/Cherry Tree

AN - Anthracite/Walnut Tree

IP44

- The **IP44 Kit** for Mechanisms of **Single Rocker** (Ref. 21981) and **Double Rockers** (Ref. 21982) assures the Protection Degree of **IP44** to the mechanisms of the MEC 21 Series.

CONTROL DEVICES

	Ref.	Box (Un)
Single Pole Switch 10AX - 250V~	21011	10
Single Pole Switch with Orienting Light 10AX - 250V~ ▪ To control electronic energy-saving lamps, we recommend the use of capacitors of 0,15µF 275V~ connected in parallel to the load to avoid the blinking in the lamp when the contact is open. ▪ Replacement LED available on page 38.	21012	10
Single Pole Switch with Pilot Lamp 10AX - 250V~ ▪ Replacement LED available on page 38.	21013	10
Two-pole Switch 10AX - 250V~	21021	10
Two-pole Switch with Pilot Lamp 10AX - 250V~ ▪ Replacement LED available on page 38.	21023	10
Two-pole Switch with Pilot Lamp 20A 20A - 250V~ ▪ Replacement LED available on page 38.	21024	10
Motion Detector of 1000W ▪ Rated Voltage: 230V~ ± 10%; 50/60Hz. ▪ Sensibility Regulation. ▪ Range of Detection: 8 meters. ▪ Detection Angle: 160°. ▪ Inverter Contact (NO+NC), voltage free. ▪ Relay Output, compatible with all types of loads.	21401 eco	1
Motion Detector of 400W ▪ Rated Voltage: 230V~ ± 10%; 50/60Hz. ▪ Sensibility Regulation. ▪ Range of Detection: 8 meters. ▪ Detection Angle: 160°. ▪ Inverter Contact (NO+NC), voltage free. ▪ Relay Output, compatible with all types of loads.	21402 eco	1

ROCKERS AND COVER PLATES

	Ref.	Colour	Box (Un)
Rocker for Switches	70601 T	BR MF AT	20
Rocker for Lighted Switches	70602 T	BR MF AT	20
Rocker for Lighted Switches / Push-button with Lamp Symbol	70797 T	BR MF AT	5
Rocker for Switches	70601 T	BR MF AT	20
Rocker for Two-pole Switch	70608 T	BR MF AT	5
Rocker for Lighted Switches	70602 T	BR MF AT	20
Rocker for Lighted Switches / Push-button with Lamp Symbol	70797 T	BR MF AT	5
Cover Plate for Motion Detectors	70401 T	BR MF AT	1

- **T** - Rocker, Cover Plate or Frame.
- **BR** - White; **MF** - Ivory; **AT** - Anthracite.
- eco - The products identified with this symbol improve the saving of energy and contribute to the the energy efficiency of the building.

CONTROL DEVICES

	Ref.	Box (Un)
One Circuit Digital Clock Switch ▪ Rated Voltage: 230V~ - 50Hz. ▪ Breaking Capacity: 6A. ▪ Output Type: ON, OFF and IMPULSE.	21046 eco	1
Two Circuits Digital Clock Switch ▪ Rated Voltage: 230V~ - 50Hz. ▪ Breaking Capacity: 6A + 6A. ▪ Output Type: ON, OFF and IMPULSE.	21047 eco	1
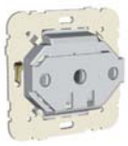 Card-system Switch 10AX - 250V~ ▪ For ATM Card Type (Ref. 21999). ▪ To control electronic energy-saving lamps, we recommend the use of capacitors of 0,15μF 275V~ connected in parallel to the load to avoid the blinking in the lamp when the contact is open.	21031 eco	10
Two Circuits Switch 10AX - 250V~	21061	10
Two Circuits Switch 20A 20A - 250V~	21065	10
Three Circuits Switch 16AX - 250V~	21088	10
Two-way Switch 10AX - 250V~	21071	10
Two-way Switch with Orienting Light 10AX - 250V~ ▪ To control electronic energy-saving lamps, we recommend the use of capacitors of 0,15μF 275V~ connected in parallel to the load to avoid the blinking in the lamp when the contact is open ▪ Replacement LED available on page 38.	21072	10
Two-way Switch with Pilot Lamp 10AX - 250V~ ▪ Replacement LED available on page 38.	21073	10

ROCKERS AND COVER PLATES

	Ref.	Colour	Box (Un)
Cover Plate for One Circuit Digital Clock Switch	70046 T	BR MF AT	1
Cover Plate for Two Circuits Digital Clock Switch	70047 T	BR MF AT	1
Cover Plate for Card-system Switch	70731 T	BR MF AT	5
Double Rockers (Pair)	70611 T	BR MF AT	20
Triple Rockers (Three)	70661 T	BR MF AT	20
Rocker for Switches	70601 T	BR MF AT	20
Rocker for Lighted Switches	70602 T	BR MF AT	20

- **T** - Rocker, Cover Plate or Frame.
- **BR** - White; **MF** - Ivory; **AT** - Anthracite.
- eco - The products identified with this symbol improve the saving of energy and contribute to the the energy efficiency of the building.

CONTROL DEVICES

	Ref.	Box (Un)
Two-way Switch 20A 20A - 250V~	21075	10
Double Two-way Switch 10AX - 250V~	21101	10
Double Two-way Switch 20A 20A - 250V~	21103	10
Intermediate Switch 10A - 250V~	21051	10
Intermediate Switch with Orienting Light 10AX - 250V~ ▪ To control electronic energy-saving lamps, we recommend the use of capacitors of 0,15µF 275V~ connected in parallel to the load to avoid the blinking in the lamp when the contact is open. ▪ Replacement LED available on page 38.	21052	10
Rocker Push-button 10A - 250V~	21151	10
NEW Rocker Push-button (NO+NC) 10A - 250V~	21150	10

ROCKERS AND COVER PLATES

	Ref.	Colour	Box (Un)
Rocker for Switches	70601 T	BR MF AT	20
Double Rockers (Pair)	70611 T	BR MF AT	20
Rocker for Switches	70601 T	BR MF AT	20
Rocker for Lighted Switches	70602 T	BR MF AT	20
Rocker for Switches	70601 T	BR MF AT	20
Rocker for Switches with Lock Symbol	70604 T	BR MF AT	5
Rocker for Switches with Bell Symbol	70605 T	BR MF AT	20
Rocker for Switches with Maid Symbol	70606 T	BR MF AT	5
Rocker for Switches with Lamp Symbol	70607 T	BR MF AT	5

- **T** - Rocker, Cover Plate or Frame.
- **BR** - White; **MF** - Ivory; **AT** - Anthracite.

CONTROL DEVICES

	Ref.	Box (Un)
Rocker Push-button with Orienting Light (250V) 10A - 250V~ ▪ Replacement LED available on page 38.	21152	10
Rocker Push-button with Orienting Light (12V) 6A - 12V ▪ Replacement LED available on page 38.	21162	10
NEW Rocker Push-button with Independent Pilot Lamp 10A - 250V~ ▪ Replacement LED available on page 38.	21153	10
Rocker Push-button with Identification (250V) 10A - 250V~	21155	10
Rocker Push-button with Identification (12V) 6A - 12V	21165	10
Double Push-button 10A - 250V~	21156	10
NEW Double Push-button (2NO+2NC) 10A - 250V~	21154	10
Rocker Push-button / Two-way Switch 10A - 250V~	21159	10

ROCKERS AND COVER PLATES

	Ref.	Colour	Box (Un)
Rocker for Lighted Switches	70602 T	BR MF AT	20
Rocker for Lighted Switches / Push-Button with Lock Symbol	70794 T	BR MF AT	5
Rocker for Lighted Switches / Push-Button with Bell Symbol	70795 T	BR MF AT	5
Rocker for Lighted Switches / Push-Button with Maid Symbol	70796 T	BR MF AT	5
Rocker for Lighted Switches / Push-Button with Lamp Symbol	70797 T	BR MF AT	5
Rocker for Switches with Identification Card	70603 T	BR MF AT	5
Double Rockers (Pair)	70611 T	BR MF AT	20

▪ **T** - Rocker, Cover Plate or Frame.
▪ **BR** - White; **MF** - Ivory; **AT** - Anthracite.

CONTROL DEVICES

	Ref.	Box (Un)
Venetian Switch 10A - 250V~ ▪ Switch function. ▪ Electrical and Mechanical Blockade against the appearance of two simultaneous orders. ▪ Toggles automatically one rocker when the other is pressed.	21290	10
Venetian Switch with Mechanical Blockage 10A - 250V~ ▪ Switch function. ▪ Electrical and Mechanical Blockade against the appearance of two simultaneous orders. ▪ It is necessary to press "STOP" before changing the sense of the movement.	21291	10
General Blinds Control Module with Infrared Remote Control ▪ Rated Voltage: 230V~ - 50Hz. ▪ Breaking Capacity: 6A. ▪ Remote control through an IR transmitter (Ref. 81901) or locally by using push-buttons. ▪ 2 programmable functions (Up/Down). ▪ Function: "Standby".	21311 eco	1
Local Blinds Control Module with Infrared Remote Control ▪ Rated Voltage: 230V~ - 50Hz. ▪ Breaking Capacity: 6A. ▪ Remote control through an IR transmitter (Ref. 81901) or locally by using push-buttons.	21312 eco	1
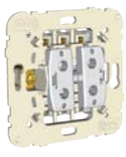 **Venetian Double Push-button** 10A - 250V~ ▪ Push-button function. ▪ Electrical and Mechanical Blockade against the appearance of two simultaneous orders.	21281	10
Venetian Double Push-button for multiple points Blinds Control 10A - 250V~ ▪ Push-button function. ▪ Electrical and Mechanical Blockade against the appearance of two simultaneous orders.	21283	10

ROCKERS AND COVER PLATES

	Ref.	Colour	Box (Un)
Rockers for Venetian Switch (Pair)	70613 T	BR MF AT	20
Cover Plate for General Blinds Control Module with Infrared Remote Control	70311 T	BR MF AT	1
Cover Plate for Local Blinds Control Module with Infrared Remote Control	70312 T	BR MF AT	1
Rockers for Venetian Push-buttons (Pair)	70612 T	BR MF AT	20

- **T** - Rocker, Cover Plate or Frame.
- **BR** - White; **MF** - Ivory; **AT** - Anthracite.
- eco - The products identified with this symbol improve the saving of energy and contribute to the the energy efficiency of the building.

CONTROL DEVICES

	Ref.	Box (Un)
Rotary Two-way Switch 16A 16AX - 250V~	21301	10
Rotary Push-button16A 16A - 250V~	21303	10
Key-lock Two-way Switch 10AX - 250V~	21352	1
Key-lock Push-button 10A - 250V~	21351	1
Pull-cord Two-way switch 10AX - 250V~	21092	10
Pull-cord Push-button 10A - 250V~	21091	10
Rotary Switch 16A 16AX - 250V~	21302	10
Dimmer / Two-way Switch of 500W ▪ **40-500W** - 230V~ - 50Hz incandescent and halogen lamps. ▪ **100-400W** - 12/24V~ low voltage halogen lamps connected through magnetic lighting transformers.	21211 eco	1
Electronic Dimmer / Two-way Switch of 320W ▪ **5-320W** - 230V~ - 50Hz incandescent and halogen lamps. ▪ 12/24V~ low voltage halogen lamps and bulbs connected through electronic lighting transformers.	21212 eco	1

ROCKERS AND COVER PLATES

	Ref.	Colour	Box (Un)
Cover Plate for Rotary Push-button / Two-way Switch	70761 T	BR MF AT	5
Cover Plate for Key-lock Push-button/ Two-way Switch	70351 T	BR MF AT	1
Cover Plate for Pull-cord Push-button/ Two-way Switch **Note:** **With protection against pulling with excessive force.**	70741 T	BR MF AT	5
Cover Plate for Rotary Switch (ON/OFF)	70762 T	BR MF AT	5
Cover Plate for Dimmer/ Two-way Switch	70721 T	BR MF AT	2

- **T** - Rocker, Cover Plate or Frame.
- **BR** - **BR** - White; **MF** - Ivory; **AT** - Anthracite.
- eco - The products identified with this symbol improve the saving of energy and contribute to the the energy efficiency of the building.

CONTROL DEVICES

	Ref.	Box (Un)
NEW Programmable Chrono-Thermostat ▪ Rated Voltage: 230V~ - 50Hz. ▪ Breaking Capacity: 16A. ▪ Inverter Contact (NO+NC), voltage free. ▪ Room Temperature Read-out from 0 to 35°C. ▪ It is possible to connect to a floor temperature sensor.	21232 eco	1
Room Thermostat with Infrared Remote Control NEW ▪ Rated Voltage: 230V~ - 50Hz. ▪ Breaking Capacity: 16A. ▪ Inverter Contact (NO+NC), voltage free. ▪ Room Temperature Read-out from 0 to 35°C. ▪ Remote control through an IR transmitter (Ref. 81902) or locally by using push-buttons. ▪ It is possible to connect to a floor temperature sensor.	21233 eco	1
Floor Temperature Sensor for Programmable Chrono-Thermostat and Room Thermostat with Infrared Remote Control NEW ▪ Length: 4m. ▪ Range: from 0 to 70°C. ▪ IP67	81950	1

ROCKERS AND COVER PLATES

	Ref.	Colour	Box (Un)
Cover Plate for Programmable Chrono-Thermostat	70740 T	BR MF AT	1
Cover Plate for Room Thermostat with Infrared Remote Control	70742 T	BR MF AT	1

DATA SOCKETS

	Ref.	Box (Un)
Single RJ45 Cat. 6 UTP Computer Socket (Supply with Connector)	21455	10
Single RJ45 Cat. 6 STP Computer Socket (Supply with Connector)	21445	10
Single RJ45 Cat. 5e UTP Computer Socket (Supply with Connector)	21453	10
Single RJ45 Cat. 5e STP Computer Socket (Supply with Connector)	21443	10
RJ45 Cat. 6 UTP Connector (250 MHz)	21978	5
RJ45 Cat. 5e UTP Connector (100 MHz)	21975	20
RJ45 Cat. 6 STP Connector (250 MHz)	21988	5
RJ45 Cat. 5e STP Connector (100 MHz)	21985	5

ROCKERS AND COVER PLATES

	Ref.	Colour	Box (Un)
Cover Plate for Single RJ45 Computer Sockets	70751 T	BR MF AT	20
NEW Cover Ring with Double Support for RJ45 Connectors	70442 S	BR MF AT	10

- **T** - Rocker, Cover Plate or Frame; **S** - Semi-assembled.
- **BR** - White; **MF** - Ivory; **AT** - Anthracite.
- eco - The products identified with this symbol improve the saving of energy and contribute to the the energy efficiency of the building.

COUPLERS FOR FIBRE OPTIC CONNECTORS

	Ref.	Box (Un)
NOVO Coupler for SC APC Duplex Fibre Optic Connector	82211	10
NOVO Coupler for SC APC Simplex Fibre Optic Connector	82210	10
NOVO Coupler for LC Duplex Fibre Optic Connector	82213	10

ROCKERS AND COVER PLATES

	Ref.	Colour	Box (Un)
Cover Plate for Coupler for SC APC Duplex Fibre Optic Connector	70448 S	BR MF AT	10
Cover Plate for Coupler for SC APC Simplex / LC Duplex Fibre Optic Connector	70449 S	BR MF AT	10

TELEPHONE SOCKETS

	Ref.	Colour	Box (Un)
50V ⎓ 70V~			
Telephone Socket (RITA)	21251 S	BR MF AT	10
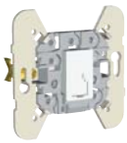 Telephone Socket (4 Conductors)	21252 S	BR MF AT	10
Telephone Socket (6 Conductors)	21253 S	BR MF AT	10
8 contacts			
T8 French Telephone Socket	21411	—	10

ROCKERS AND COVER PLATES

	Ref.	Colour	Box (Un)
Cover Plate for Telephone Socket	70712 T	BR MF AT	20
Cover Plate for T8 French Telephone Socket	70718 T	BR MF AT	20

- **T** - Rocker, Cover Plate or Frame; **S** - Semi-assembled.
- **BR** - White; **MF** - Ivory; **AT** - Anthracite.

NEW RANGE

RADIO, TELEVISION AND SATELLITE SOCKETS

STAR CONNECTION

	Ref.	Box (Un)
R - TV - SAT Socket for Star Connection ▪ 4 - 862 MHz: < 1dB. ▪ 950 - 2400 MHz: < 3dB. ▪ Current Flow of 600 mA (DC) Max.	21543	10
R - TV Socket for Star Connection ▪ 4 - 82 MHz: < 1dB. ▪ 84 - 108 MHz: < 2dB. ▪ 112 - 1000 MHz: < 1dB.	21533	10

SERIES CONNECTION

	Ref.	Box (Un)
R - TV - SAT Socket (Terminal Type) ▪ 4 - 2400 MHz: < 5dB. ▪ Current Flow of 500 mA (DC) Max.	21555	10
R - TV - SAT Socket (Crossover Type) ▪ 4 - 2400 MHz: < 9dB. ▪ Current Flow of 500 mA (DC) Max. ▪ Insertion Losses: 2dB.	21565	10
R - TV Socket (Terminal Type) ▪ 4 - 82 MHz: < 5dB. ▪ 84 - 108 MHz: < 6dB. ▪ 112 - 1000 MHz: < 5dB.	21554	10
R - TV Socket (Crossover Type) ▪ 4 - 1000 MHz: < 9dB. ▪ Insertion Losses: 2dB.	21564	10

ROCKERS AND COVER PLATES

	Ref.	Colour	Box (Un)
Cover Plate for R - TV - SAT Sockets	70775 T	BR MF AT	10
Cover Plate for R - TV Sockets	70776 T	BR MF AT	10
Cover Plate for R - TV - SAT Sockets	70775 T	BR MF AT	10
Cover Plate for R - TV Sockets	70776 T	BR MF AT	10

- **T** - Rocker, Cover Plate or Frame.
- **BR** - White; **MF** - Ivory; **AT** - Anthracite.

NEW RANGE

MULTIMEDIA SOCKETS

STAR CONNECTION

	Ref.	Box (Un)
R - TV - SAT - RJ45 Cat. 6 UTP - FO SC-APC Multimedia Socket for Star Connection ▪ 4 - 862 MHz: < 1dB. ▪ 950 - 2400 MHz: < 3dB. ▪ Current Flow of 500 mA (DC) Max.	21545	10
R - TV - SAT - RJ45 Cat. 6 UTP Multimedia Socket for Star Connection ▪ To be used with a Fibre Optic connector type SC APC Simplex or LC Duplex Fibre Optic connectors (page 136). ▪ 4 - 862 MHz: < 1dB. ▪ 950 - 2400 MHz: < 3dB. ▪ Current Flow of 500 mA (DC) Max.	21544	10
R - TV - SAT - 2xRJ45 Cat. 6 UTP Multimedia Socket for Star Connection ▪ 4 - 862 MHz: < 1dB. ▪ 950 - 2400 MHz: < 3dB. ▪ Current Flow of 500 mA (DC) Max.	21546	10
R - TV - RJ45 Cat. 6 UTP - FO SC-APC Multimedia Socket for Star Connection ▪ 4 - 82 MHz: < 1dB. ▪ 84 - 108 MHz: < 2dB. ▪ 112 - 1000 MHz: < 1dB.	21535	10
R - TV - RJ45 Cat. 6 UTP Multimedia Socket for Star Connection ▪ 4 - 82 MHz: < 1dB ▪ 84 - 108 MHz: < 2dB ▪ 112 - 1000 MHz: < 1dB	21534	10

ROCKERS AND COVER PLATES

	Ref.	Colour	Box (Un)
Cover Plate for R - TV - SAT - RJ45 / R - TV - SAT - RJ45 - FO Multimedia Sockets	70770 T	BR MF AT	10
Cover Plate for R - TV - SAT - 2xRJ45 Multimedia Socket	70773 T	BR MF AT	10
Cover Plate for R - TV - RJ45 / R - TV - RJ45 - FO Multimedia Sockets	70774 T	BR MF AT	10

ENERGY SOCKETS

	Ref.	Box (Un)
NEW Earth Socket (Schuko Type) with Screwless Terminals 16A - 250V~	21130	10
Earth Socket (Schuko Type) 16A - 250V~	21131	10
Single Phase Socket 16A - 250V~	21121	10
NEW Earth Socket (French Type) with Screwless Terminals 16A - 250V~	21110	10
Earth Socket (French Type) 16A - 250V~	21111	10
Earth Socket (Euro-USA Type) 15A - 127V~ / 16A - 250V~	21140	10
NEW Earth Socket (Saudi Type) 15A - 127V~	21143	10

ROCKERS AND COVER PLATES

	Ref.	Colour	Box (Un)
Safety Cover Plate for Earth Socket (Schuko Type)	70632 T	BR MF AT LR VD VM	20
Cover Plate for Earth Socket (Schuko Type)	70631 T	BR MF AT LR VD VM	20
Cover Plate for Schuko Socket with Safety and Hinged Lid (**IP44**) IP44	70634 T	BR MF AT VM	20
Safety Cover Plate for Single Phase Socket	70622 T	BR MF AT	20
Cover Plate for Single Phase Socket	70621 T	BR MF AT	20
Safety Cover Plate for Earth Socket (French Type)	70652 T	BR MF AT LR VD VM	20
NEW Cover Plate for French Socket with Safety and Hinged Lid (**IP44**) IP44	70654 T	BR MF AT	20
Safety Cover Plate for Earth Socket (Euro-USA Type)	70842 T	BR MF AT LR VD VM	20
Cover Plate for Earth Socket (Euro-USA Type)	70841 T	BR MF AT LR VD VM	20
Safety Cover Plate for Earth Socket (Saudi Type)	70843 T	BR MF AT LR VD VM	20

- **T** - Rocker, Cover Plate or Frame.
- **BR** - White; **MF** - Ivory; **AT** - Anthracite; **LR** - Orange; **VD** - Green; **VM** - Red.

OTHER PRODUCTS

	Ref.	Box (Un)
Three Wall Rose ▪ 3x2,5mm² - 250V~.	21173	10
Four Wall Rose ▪ 4x2,5mm² - 250V~.	21174	10
Pilot Light ▪ Máx. 5W (E14) 250V~. ▪ To be used with Lamp Ref. 81012 (page 158).	21360	10
NEW Screw Terminal Loudspeaker Socket	21220	4
Support for Blind Cover	21222	10

ROCKERS AND COVER PLATES

	Ref.	Colour	Box (Un)
Cover Plate for Wall Roses	70671 T	BR MF AT	20
Transparent Cover for Pilot Light	70781 T	IC LR VD VM	5
Cover Plate for Screw Terminal Loudspeaker Socket	70713 T	BR MF AT	4 2
Blind Cover Plate	70677 T	BR MF AT	20

ACCESSORIES

		Ref.	Colour	Box (Un)
IP44 Kit for MEC 21 Mechanisms - Single Rocker	IP44	21981	—	5
IP44 Kit for MEC 21 Mechanisms - Double Rockers	IP44	21982	—	5
Surface Mounting Box for Sirius 70 Series ▪ To be used in installations with **trunkings of 10 and 16 Series**.		10975 A	BR MF AT	10
Cover for Mechanisms Protection		21971	—	40
Level and Mounting Accessory for MEC 21 Mechanisms		21989	—	2

ACCESSORIES

	Ref.	Colour	Box (Un)
Card for Card-system Switch	21999	—	20
Universal Cover Ring / Adaptor for 45x45 Modules	70881 T	BR MF AT VM	5
Replacement LED for Lighted Mechanisms of MEC 21 / 48 Series - 250V~ ▪ 110/250V~	81019	—	10
Replacement LED for Lighted Mechanisms of MEC 21 / 48 Series - 12V ▪ 12V	81018	—	10
Automatic Relay for Blinds Control ▪ Rated Voltage: 230V~ - 50Hz. ▪ Breaking Capacity: 6A. ▪ Temporized. ▪ Connect to the Double Push-buttons and to Venetian Double Push-buttons.	81512	—	1
Relay for Blinds Control ▪ Rated Voltage: 230V~ - 50Hz. ▪ Breaking Capacity: 6A. ▪ No Temporized. ▪ Connect locally to Venetian Double Push-button (Ref. 21283). ▪ For the centralized command of the installation, connect remotely to a Venetian Double Push-button (Ref. 21283).	81511	—	1
Infrared Remote Control Transmitter for Blinds Control ▪ 4 groups of Buttons with 2 programmable functions. ▪ It works with 2 AAA batteries, not included.	81901	—	1
Infrared Remote Control Transmitter for Room Thermostat ▪ It works with 2 AAA batteries, not included.	81902	—	1
Blind Face Plate ▪ To be used with F Type Coaxial connectors (page 136).	45970 S	BR MF AT	5

SEMI - ASSEMBLED DEVICES (Without Connectors)

	Ref.	Colour	Box (Un)
Double RJ45 Computer Socket **Note:** To be used with RJ45 Connectors of the DVI Series (page 136).	70450 S	BR MF AT	10

▪ **T** - Rocker, Cover Plate or Frame; **S** - Semi-assembled.
▪ **BR** - White; **MF** - Ivory; **AT** - Anthracite; **VM** - Red.

COMPLETE DEVICES

	Ref.	Colour	Box (Un)
Monoblock Safety Earth Socket (Schuko Type) with Screwless Terminals 16A - 250V~	70139 C	BR MF AT	10
Monoblock Safety Earth Socket (Schuko Type) 16A - 250V~	70138 C	BR MF AT	10
Monoblock Earth Socket (Schuko Type) 16A - 250V~	70135 C	BR MF AT	10
Monoblock Double Safety Earth Socket (Schuko Type) 16A - 250V~	70332 C	BR MF AT	10
Monoblock Double Earth Socket (Schuko Type) 16A - 250V~	70331 C	BR MF AT	10
Monoblock Double Safety Single Phase Socket 16A - 250V~	70322 C	BR MF AT	10
Monoblock Double Single Phase Socket 16A - 250V~	70321 C	BR MF AT	10
Earth Socket (British Type) 13A - 250V~	70184 C	BR MF AT	5
Earth Socket (British Type) with Pilot Lamp 13A - 250V~	70183 C	BR MF AT	5
Dimmer / Two-way Switch of 500W ▪ **40 - 500W** - 230V~ - 50Hz incandescent and halogen lamps. ▪ **100 - 400W** - 12/24V~ low voltage halogen lamps connected through magnetic lighting transformers.	70211 C eco	BR MF AT	1
Electronic Dimmer / Two-way Switch of 320W ▪ **5-320W** - 230V~ - 50Hz incandescent and halogen lamps. ▪ 12/24V~ low voltage halogen lamps and bulbs connected through electronic lighting transformers.	70212 C eco	BR MF AT	1

- **C** - Complete Device.
- **BR** - White; **MF** - Ivory; **AT** - Anthracite.
- eco - The products identified with this symbol improve the saving of energy and contribute to the the energy efficiency of the building.

FRAMES

	Single Frame			Double Horizontal Frame			Double Vertical Frame		
	Ref.	Colour	Box (Un)	Ref.	Colour	Box (Un)	Ref.	Colour	Box (Un)
CLASSIC	70910 T	BR MF AT	20 5	70921 T	BR MF AT	10 2	70922 T	BR MF AT	10 2
AMBIENT	70910 T	BB MM BM BZ BA BV	5	70921 T	BB MM BM BZ BA BV	2	70922 T	BB MM BM BZ BA BV	2
METAL	70910 T	BI MI AI BO MO AO	5	70921 T	BI MI AI BO MO AO	2	70922 T	BI MI AI BO MO AO	2
WOOD	70910 T	BF MA AF BC MC AC BG MG AG BN MN AN	5	70921 T	BF MA AF BC MC AC BG MG AG BN MN AN	2	70922 T	BF MA AF BC MC AC BG MG AG BN MN AN	2

- **T** - Rocker, Cover Plate or Frame.
- **CLASSIC**: **BR** - White; **MF** - Ivory; **AT** - Anthracite.
- **AMBIENT**: **BB** - White/White; **MM** - Ivory/Ivory; **BM** - White/Ivory; **BZ** - White/Blue; **BA** - White/Yellow; **BV** - White/Green.

Triple Horizontal Frame

Triple Vertical Frame

Four-Gang Horizontal Frame

Four-Gang Vertical Frame

IP44 Waterproof Frame

70961 T

Monoblock Cover for Single Phase Socket

70901 T

Monoblock Cover for Safety Earth Socket (Schuko Type)

70903 T

Monoblock Cover for Earth Socket (Schuko Type)

70902 T

Ref.	Colour	Box (Un)	Ref.	Colour	Box (Un)	Ref.	Colour	Box (Un)	Ref.	Colour	Box (Un))	Ref.	Colour	Box (Un)
70931 T	BR MF AT	10 2	70932 T	BR MF AT	10 2	70941 T	BR MF AT	2	70942 T	BR MF AT	2	70961 T 70901 T 70903 T 70902 T	BR MF AT	10 20 20 20
70931 T	BB MM BM BZ BA BV	2	70932 T	BB MM BM BZ BA BV	2	—	—	—	—	—	—	—	—	—
70931 T	BI MI AI BO MO AO	2	70932 T	BI MI AI BO MO AO	2	—	—	—	—	—	—	—	—	—
70931 T	BF MA AF BC MC AC BG MG AG BN MN AN	2	70932 T	BF MA AF BC MC AC BG MG AG BN MN AN	2	—	—	—	—	—	—	—	—	—

- **T** - Rocker, Cover Plate or Frame.
- **METAL**: **BI** - White/Inox; **MM** - Ivory/Inox; **AI** - Anthracite/Inox; **BO** - White/Gold; **MO** - Ivory/Gold; **AO** - Anthracite/Gold.
- **WOOD**: **BF** - White/Beech Wood; **MA** - Ivory/Beech Wood; **AF** - Anthracite/Beech Wood; **BC** - White/Cherry Tree; **MC** - Ivory/Cherry Tree; **AC** - Anthracite/Cherry Tree; **BG** - White/Mahogany; **MG** - Ivory/Mahogany; **AG** - Anthracite/Mahogany; **BN** - White/Walnut Tree; **MN** - Ivory/Walnut Tree; **AN** - Anthracite/Walnut Tree.

Single Pole Switch – METALIZED
PR - Silver

The **APOLO 5000 Series** has **straight lines** and an **elegant shape**.

Its **update design** gives a **minimal touch** and a **distinction** to the decoration.

It is available in **Classic colours**: White, Ivory and Black; and in **Metallic tones**: Silver, Graphite, Platinium and Champagne.

STANDARD

BR - White

MF - Ivory

PT - Black

METALIZED

PR - Silver

GR - Graphite

PL - Platinium

CH - Champagne

IP44

- The **IP44 Kit** for Mechanisms of **Single Rocker** (Ref. 21981) and **Double Rockers** (Ref. 21982) assures the Protection Degree of **IP44** to the mechanisms of the MEC 21 Series.

CONTROL DEVICES

	Ref.	Box (Un)
Single Pole Switch 10AX - 250V~	21011	10
Single Pole Switch with Orienting Light 10AX - 250V~ ▪ To control electronic energy-saving lamps, we recommend the use of capacitors of 0,15µF 275V~ connected in parallel to the load to avoid the blinking in the lamp when the contact is open. ▪ Replacement LED available on page 56.	21012	10
Single Pole Switch with Pilot Lamp 10AX - 250V~ ▪ Replacement LED available on page 56.	21013	10
Two-pole Switch 10AX - 250V~	21021	10
Two-pole Switch with Pilot Lamp 10AX - 250V~ ▪ Replacement LED available on page 56.	21023	10
Two-pole Switch with Pilot Lamp 20A 20A - 250V~ ▪ Replacement LED available on page 56.	21024	10
Motion Detector of 1000W ▪ Rated Voltage: 230V~ ± 10%; 50/60Hz. ▪ Sensibility Regulation. ▪ Range of Detection: 8 meters. ▪ Detection Angle: 160°. ▪ Inverter Contact (NO+NC), voltage free. ▪ Relay Output, compatible with all types of loads.	21401 eco	1
Motion Detector of 400W ▪ Rated Voltage: 230V~ ± 10%; 50/60Hz. ▪ Sensibility Regulation. ▪ Range of Detection: 8 meters. ▪ Detection Angle: 160°. ▪ Inverter Contact (NO+NC), voltage free. ▪ Relay Output, compatible with all types of loads.	21402 eco	1

ROCKERS AND COVER PLATES

	Ref.	Colour	Box (Un)
Rocker for Switches	50601 T	BR MF PT PR GR PL CH	20 10 2
Rocker for Lighted Switches	50602 T	BR MF PT PR GR PL CH	20 2
Rocker for Lighted Switches / Push-button with Lamp Symbol	50797 T	BR MF PT PR GR PL CH	5 2
Rocker for Switches	50601 T	BR MF PT PR GR PL CH	20 10 2
Rocker for Two-pole Switch	50608 T	BR MF PT PR GR PL CH	5
Rocker for Lighted Switches	50602 T	BR MF PT PR GR PL CH	20 2
Rocker for Lighted Switches / Push-button with Lamp Symbol	50797 T	BR MF PT PR GR PL CH	5 2
Cover Plate for Motion Detectors	50401 T	BR MF PT PR GR PL CH	1

- **T** - Rocker, Cover Plate or Frame.
- **BR** - White; **MF** - Ivory; **PT** - Black; **PR** - Silver; **GR** - Graphite; **PL** - Platinium; **CH** - Champagne.
- eco - The products identified with this symbol improve the saving of energy and contribute to the the energy efficiency of the building.

CONTROL DEVICES

	Ref.	Box (Un)
One Circuit Digital Clock Switch ▪ Rated Voltage: 230V~ - 50Hz. ▪ Breaking Capacity: 6A. ▪ Output Type: ON, OFF and IMPULSE.	21046 eco	1
Two Circuits Digital Clock Switch ▪ Rated Voltage: 230V~ - 50Hz. ▪ Breaking Capacity: 6A + 6A. ▪ Output Type: ON, OFF and IMPULSE.	21047 eco	1
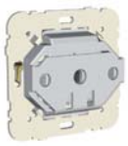 Card-system Switch 10AX - 250V~ ▪ For ATM Card Type (Ref. 21999). ▪ To control electronic energy-saving lamps, we recommend the use of capacitors of 0,15μF 275V~ connected in parallel to the load to avoid the blinking in the lamp when the contact is open.	21031 eco	10
Two Circuits Switch 10AX - 250V~	21061	10
Two Circuits Switch 20A 20A - 250V~	21065	10
Three Circuits Switch 16AX - 250V~	21088	10
Two-way Switch 10AX - 250V~	21071	10
Two-way Switch with Orienting Light 10AX - 250V~ ▪ To control electronic energy-saving lamps, we recommend the use of capacitors of 0,15μF 275V~ connected in parallel to the load to avoid the blinking in the lamp when the contact is open ▪ Replacement LED available on page 56.	21072	10
Two-way Switch with Pilot Lamp 10AX - 250V~ ▪ Replacement LED available on page 56.	21073	10

ROCKERS AND COVER PLATES

	Ref.	Colour	Box (Un)
Cover Plate for One Circuit Digital Clock Switch	50046 T	BR MF PT PR GR PL CH	1
Cover Plate for Two Circuits Digital Clock Switch	50047 T	BR MF PT PR GR PL CH	1
Cover Plate for Card-system Switch	50731 T	BR MF PT PR GR PL CH	5 2
Double Rockers (Pair)	50611 T	BR MF PT PR GR PL CH	20 10 2
Triple Rockers (Three)	50661 T	BR MF PT PR GR PL CH	20 10 2
Rocker for Switches	50601 T	BR MF PT PR GR PL CH	20 10 2
Rocker for Lighted Switches	50602 T	BR MF PT PR GR PL CH	20 2

- **T** - Rocker, Cover Plate or Frame.
- **BR** - White; **MF** - Ivory; **PT** - Black; **PR** - Silver; **GR** - Graphite; **PL** - Platinium; **CH** - Champagne.
- eco - The products identified with this symbol improve the saving of energy and contribute to the the energy efficiency of the building.

CONTROL DEVICES

	Ref.	Box (Un)
Two-way Switch 20A 20A - 250V~	21075	10
Double Two-way Switch 10AX - 250V~	21101	10
Double Two-way Switch 20A 20A - 250V~	21103	10
Intermediate Switch 10A - 250V~	21051	10
Intermediate Switch with Orienting Light 10AX - 250V~ ▪ To control electronic energy-saving lamps, we recommend the use of capacitors of 0,15µF 275V~ connected in parallel to the load to avoid the blinking in the lamp when the contact is open. ▪ Replacement LED available on page 56.	21052	10
Rocker Push-button 10A - 250V~	21151	10
NEW Rocker Push-button (NO+NC) 10A - 250V~	21150	10

ROCKERS AND COVER PLATES

	Ref.	Colour	Box (Un)
Rocker for Switches	50601 T	BR MF PT PR GR PL CH	20 10 2
Double Rockers (Pair)	50611 T	BR MF PT PR GR PL CH	20 10 2
Rocker for Switches	50601 T	BR MF PT PR GR PL CH	20 10 2
Rocker for Lighted Switches	50602 T	BR MF PT PR GR PL CH	20 2
Rocker for Switches	50601 T	BR MF PT PR GR PL CH	20 10 2
Rocker for Switches with Lock Symbol	50604 T	BR MF PT PR GR PL CH	5 2
Rocker for Switches with Bell Symbol	50605 T	BR MF PT PR GR PL CH	20 2
Rocker for Switches with Maid Symbol	50606 T	BR MF PT PR GR PL CH	5 2
Rocker for Switches with Lamp Symbol	50607 T	BR MF PT PR GR PL CH	5 2

▪ **T** - Rocker, Cover Plate or Frame.
▪ **BR** - White; **MF** - Ivory; **PT** - Black; **PR** - Silver; **GR** - Graphite; **PL** - Platinium; **CH** - Champagne.

CONTROL DEVICES

	Ref.	Box (Un)
Rocker Push-button with Orienting Light (250V) 10A - 250V~ ▪ Replacement LED available on page 56.	21152	10
Rocker Push-button with Orienting Light (12V) 6A - 12V ▪ Replacement LED available on page 56.	21162	10
NEW Rocker Push-button with Independent Pilot Lamp 10A - 250V~ ▪ Replacement LED available on page 56.	21153	10
Rocker Push-button with Identification (250V) 10A - 250V~	21155	10
Rocker Push-button with Identification (12V) 6A - 12V	21165	10
Double Push-button 10A - 250V~	21156	10
NEW Double Push-button (2NO+2NC) 10A - 250V~	21154	10
Rocker Push-button / Two-way Switch 10A - 250V~	21159	10

ROCKERS AND COVER PLATES

	Ref.	Colour	Box (Un)
Rocker for Lighted Switches	50602 T	BR MF PT PR GR PL CH	20 2
Rocker for Lighted Switches / Push-Button with Lock Symbol	50794 T	BR MF PT PR GR PL CH	5 2
Rocker for Lighted Switches / Push-Button with Bell Symbol	50795 T	BR MF PT PR GR PL CH	5 2
Rocker for Lighted Switches / Push-Button with Maid Symbol	50796 T	BR MF PT PR GR PL CH	5 2
Rocker for Lighted Switches / Push-Button with Lamp Symbol	50797 T	BR MF PT PR GR PL CH	5 2
Rocker for Switches with Identification Card	50603 T	BR MF PT PR GR PL CH	5 2
Double Rockers (Pair)	50611 T	BR MF PT PR GR PL CH	20 10 2

▪ **T** - Rocker, Cover Plate or Frame.
▪ **BR** - White; **MF** - Ivory; **PT** - Black; **PR** - Silver; **GR** - Graphite; **PL** - Platinium; **CH** - Champagne.

CONTROL DEVICES

	Ref.	Box (Un)
Venetian Switch 10A - 250V~ ▪ Switch function. ▪ Electrical and Mechanical Blockade against the appearance of two simultaneous orders. ▪ Toggles automatically one rocker when the other is pressed.	21290	10
Venetian Switch with Mechanical Blockage 10A - 250V~ ▪ Switch function. ▪ Electrical and Mechanical Blockade against the appearance of two simultaneous orders. ▪ It is necessary to press "STOP" before changing the sense of the movement.	21291	10
General Blinds Control Module with Infrared Remote Control ▪ Rated Voltage: 230V~ - 50Hz. ▪ Breaking Capacity: 6A. ▪ Remote control through an IR transmitter (Ref. 81901) or locally by using push-buttons. ▪ 2 programmable functions (Up/Down). ▪ Function: "Standby".	21311 eco	1
Local Blinds Control Module with Infrared Remote Control ▪ Rated Voltage: 230V~ - 50Hz. ▪ Breaking Capacity: 6A. ▪ Remote control through an IR transmitter (Ref. 81901) or locally by using push-buttons.	21312 eco	1
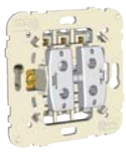 **Venetian Double Push-button** 10A - 250V~ ▪ Push-button function. ▪ Electrical and Mechanical Blockade against the appearance of two simultaneous orders.	21281	10
Venetian Double Push-button for multiple points Blinds Control 10A - 250V~ ▪ Push-button function. ▪ Electrical and Mechanical Blockade against the appearance of two simultaneous orders.	21283	10

ROCKERS AND COVER PLATES

	Ref.	Colour	Box (Un)
Rockers for Venetian Switch (Pair)	50613 T	BR MF PT PR GR PL CH	20 10 2
Cover Plate for General Blinds Control Module with Infrared Remote Control	50311 T	BR MF PT PR GR PL CH	1
Cover Plate for Local Blinds Control Module with Infrared Remote Control	50312 T	BR MF PT PR GR PL CH	1
Rockers for Venetian Push-buttons (Pair)	50612 T	BR MF PT PR GR PL CH	20 10 2

- **T** - Rocker, Cover Plate or Frame.
- **BR** - White; **MF** - Ivory; **PT** - Black; **PR** - Silver; **GR** - Graphite; **PL** - Platinium; **CH** - Champagne.
- eco - The products identified with this symbol improve the saving of energy and contribute to the the energy efficiency of the building.

CONTROL DEVICES

	Ref.	Box (Un)
Rotary Two-way Switch 16A 16AX - 250V~	21301	10
Rotary Push-button16A 16A - 250V~	21303	10
Key-lock Two-way Switch 10AX - 250V~	21352	1
Key-lock Push-button 10A - 250V~	21351	1
Pull-cord Two-way switch 10AX - 250V~	21092	10
Pull-cord Push-button 10A - 250V~	21091	10
Rotary Switch 16A 16AX - 250V~	21302	10
Dimmer / Two-way Switch of 500W ▪ **40-500W** - 230V~ - 50Hz incandescent and halogen lamps. ▪ **100-400W** - 12/24V~ low voltage halogen lamps connected through magnetic lighting transformers.	21211 eco	1
Electronic Dimmer / Two-way Switch of 320W ▪ **5-320W** - 230V~ - 50Hz incandescent and halogen lamps. ▪ 12/24V~ low voltage halogen lamps and bulbs connected through electronic lighting transformers.	21212 eco	1

ROCKERS AND COVER PLATES

	Ref.	Colour	Box (Un)
Cover Plate for Rotary Push-button / Two-way Switch	50761 T	BR MF PT PR GR PL CH	5 2
Cover Plate for Key-lock Push-button/ Two-way Switch	50351 T	BR MF PT PR GR PL CH	1
Cover Plate for Pull-cord Push-button/ Two-way Switch **Note:** **With protection against pulling with excessive force.**	50741 T	BR MF PT PR GR PL CH	5 2
Cover Plate for Rotary Switch (ON/OFF)	50762 T	BR MF PT PR GR PL CH	5 2
Cover Plate for Dimmer/ Two-way Switch	50721 T	BR MF PT PR GR PL CH	2 1

- **T** - Rocker, Cover Plate or Frame.
- **BR** - White; **MF** - Ivory; **PT** - Black; **PR** - Silver; **GR** - Graphite; **PL** - Platinium; **CH** - Champagne.
- eco - The products identified with this symbol improve the saving of energy and contribute to the the energy efficiency of the building.

CONTROL DEVICES

	Ref.	Box (Un)
NEW Programmable Chrono-Thermostat ▪ Rate d Voltage: 230V~ - 50Hz. ▪ Breaking Capacity: 16A. ▪ Inverter Contact (NO+NC), voltage free. ▪ Room Temperature Read-out from 0 to 35°C. ▪ It is possible to connect to a floor temperature sensor.	21232 eco	1
Room Thermostat with Infrared Remote Control NEW ▪ Rated Voltage: 230V~ - 50Hz. ▪ Breaking Capacity: 16A. ▪ Inverter Contact (NO+NC), voltage free. ▪ Room Temperature Read-out from 0 to 35°C. ▪ Remote control through an IR transmitter (Ref. 81902) or locally by using push-buttons. ▪ It is possible to connect to a floor temperature sensor.	21233 eco	1
Floor Temperature Sensor for Programmable Chrono-Thermostat and Room Thermostat with Infrared Remote Control NEW ▪ Length: 4m. ▪ Range: from 0 to 70°C. ▪ IP67	81950	1

ROCKERS AND COVER PLATES

	Ref.	Colour	Box (Un)
Cover Plate for Programmable Chrono-Thermostat	50740 T	BR MF PT PR GR PL CH	1
Cover Plate for Room Thermostat with Infrared Remote Control	50742 T	BR MF PT PR GR PL CH	1

TELEPHONE SOCKETS

	Ref.	Box (Un)
Single RJ45 Cat. 6 UTP Computer Socket (Supply with Connector)	21455	10
Single RJ45 Cat. 6 STP Computer Socket (Supply with Connector)	21445	10
Single RJ45 Cat. 5e UTP Computer Socket (Supply with Connector)	21453	10
Single RJ45 Cat. 5e STP Computer Socket (Supply with Connector)	21443	10
RJ45 Cat. 6 UTP Connector (250 MHz)	21978	5
RJ45 Cat. 5e UTP Connector (100 MHz)	21975	20
RJ45 Cat. 6 STP Connector (250 MHz)	21988	5
RJ45 Cat. 5e STP Connector (100 MHz)	21985	5

ROCKERS AND COVER PLATES

	Ref.	Colour	Box (Un)
Cover Plate for Single RJ45 Computer Sockets	50751 T	BR MF PT PR GR PL CH	20 2
NEW Cover Ring with Double Support for RJ45 Connectors	50442 S	BR MF PT PR GR PL CH	10 5

- **T** - Rocker, Cover Plate or Frame; **S** - Semi-assembled.
- **BR** - White; **MF** - Ivory; **PT** - Black; **PR** - Silver; **GR** - Graphite; **PL** - Platinium; **CH** - Champagne.
- eco - The products identified with this symbol improve the saving of energy and contribute to the the energy efficiency of the building.

COUPLERS FOR FIBRE OPTIC CONNECTORS

	Ref.	Box (Un))
NEW Coupler for SC APC Duplex Fibre Optic Connector	82211	10
NEW Coupler for SC APC Simplex Fibre Optic Connector	82210	10
NEW Coupler for LC Duplex Fibre Optic Connector	82213	10

ROCKERS AND COVER PLATES

	Ref.	Colour	Box (Un)
Cover Plate for Coupler for SC APC Duplex Fibre Optic Connector	50448 S	BR MF PT PR GR PL CH	10 2
Cover Plate for Coupler for SC APC Simplex / LC Duplex Fibre Optic Connector	50449 S	BR MF PT PR GR PL CH	10 2

TELEPHONE SOCKETS

	Ref.	Colour	Box (Un)
50V ⎓ 70V~			
Telephone Socket (RITA)	21251 S	BR MF CZ PT	10
Telephone Socket (4 Conductors)	21252 S	BR MF CZ PT	10
Telephone Socket (6 Conductors)	21253 S	BR MF CZ PT	10
8 contacts			
T8 French Telephone Socket	21411	—	10

ROCKERS AND COVER PLATES

	Ref.	Colour	Box (Un)
Cover Plate for Telephone Socket	50712 T	BR MF PT PR GR PL CH	20 2
Cover Plate for T8 French Telephone Socket	50718 T	BR MF PT PR GR PL CH	20 2

Note: For the Cover Plates of the METAL Finishing, please use the mechanism in the following colours:
- **PR** (Silver) — **CZ** (Grey);
- **GR** (Graphite) — **CZ** (Grey);
- **PL** (Platinium) — **MF** (Ivory);
- **CH** (Champagne) — **MF** (Ivory)

NEW RANGE

RADIO, TELEVISION AND SATELLITE SOCKETS

STAR CONNECTION

R - TV - SAT Socket for Star Connection
- 4 - 862 MHz: < 1dB.
- 950 - 2400 MHz: < 3dB.
- Current Flow of 600 mA (DC) Max.

Ref. 21543 — Box (Un) 10

R - TV Socket for Star Connection
- 4 - 82 MHz: < 1dB.
- 84 - 108 MHz: < 2dB.
- 112 - 1000 MHz: < 1dB.

Ref. 21533 — Box (Un) 10

SERIES CONNECTION

R - TV - SAT Socket (Terminal Type)
- 4 - 2400 MHz: < 5dB.
- Current Flow of 500 mA (DC) Max.

Ref. 21555 — Box (Un) 10

R - TV - SAT Socket (Crossover Type)
- 4 - 2400 MHz: < 9dB.
- Current Flow of 500 mA (DC) Max.
- Insertion Losses: 2dB.

Ref. 21565 — Box (Un) 10

R - TV Socket (Terminal Type)
- 4 - 82 MHz: < 5dB.
- 84 - 108 MHz: < 6dB.
- 112 - 1000 MHz: < 5dB.

Ref. 21554 — Box (Un) 10

R - TV Socket (Crossover Type)
- 4 - 1000 MHz: < 9dB.
- Insertion Losses: 2dB.

Ref. 21564 — Box (Un) 10

ROCKERS AND COVER PLATES

Cover Plate for R - TV - SAT Sockets

Ref.	Colour	Box (Un)
50775 T	BR MF	10
	PT PR GR PL CH	5

Cover Plate for R - TV Sockets

Ref.	Colour	Box (Un)
50776 T	BR MF PT	10
	PR GR PL CH	5

Cover Plate for R - TV - SAT Sockets

Ref.	Colour	Box (Un)
50775 T	BR MF	10
	PT PR GR PL CH	5

Cover Plate for R - TV Sockets

Ref.	Colour	Box (Un)
50776 T	BR MF PT	10
	PR GR PL CH	5

- **T** - Rocker, Cover Plate or Frame.
- **BR** - White; **MF** - Ivory; **PT** - Black; **PR** - Silver; **GR** - Graphite; **PL** - Platinium; **CH** - Champagne.

NEW RANGE

MULTIMEDIA SOCKETS

STAR CONNECTION

	Ref.	Box (Un))
R - TV - SAT - RJ45 Cat. 6 UTP - FO SC-APC Multimedia Socket for Star Connection ▪ 4 - 862 MHz: < 1dB. ▪ 950 - 2400 MHz: < 3dB. ▪ Current Flow of 500 mA (DC) Max.	21545	10
R - TV - SAT - RJ45 Cat. 6 UTP Multimedia Socket for Star Connection ▪ To be used with a Fibre Optic connector type SC APC Simplex or LC Duplex Fibre Optic connectors (page 136). ▪ 4 - 862 MHz: < 1dB. ▪ 950 - 2400 MHz: < 3dB. ▪ Current Flow of 500 mA (DC) Max.	21544	10
R - TV - SAT - 2xRJ45 Cat. 6 UTP Multimedia Socket for Star Connection ▪ 4 - 862 MHz: < 1dB. ▪ 950 - 2400 MHz: < 3dB. ▪ Current Flow of 500 mA (DC) Max.	21546	10
R - TV - RJ45 Cat. 6 UTP - FO SC-APC Multimedia Socket for Star Connection ▪ 4 - 82 MHz: < 1dB. ▪ 84 - 108 MHz: < 2dB. ▪ 112 - 1000 MHz: < 1dB.	21535	10
R - TV - RJ45 Cat. 6 UTP Multimedia Socket for Star Connection ▪ 4 - 82 MHz: < 1dB ▪ 84 - 108 MHz: < 2dB ▪ 112 - 1000 MHz: < 1dB	21534	10

ROCKERS AND COVER PLATES

	Ref.	Colour	Box (Un)
Cover Plate for R - TV - SAT - RJ45 / R - TV - SAT - RJ45 - FO Multimedia Sockets	50770 T	BR MF PT PR GR PL CH	10 5
Cover Plate for R - TV - SAT - 2xRJ45 Multimedia Socket	50773 T	BR MF PT PR GR PL CH	10 5
Cover Plate for R - TV - RJ45 / R - TV - RJ45 - FO Multimedia Sockets	50774 T	BR MF PT PR GR PL CH	10 5

ENERGY SOCKETS

	Ref.	Box (Un)
NEW Earth Socket (Schuko Type) with Screwless Terminals 16A - 250V~	21130	10
Earth Socket (Schuko Type) 16A - 250V~	21131	10
Single Phase Socket 16A - 250V~	21121	10
NEW Earth Socket (French Type) with Screwless Terminals 16A - 250V~	21110	10
Earth Socket (French Type) 16A - 250V~	21111	10

ROCKERS AND COVER PLATES

	Ref.	Colour	Box (Un)
Safety Cover Plate for Earth Socket (Schuko Type)	50632 T	BR MF PT LR VD VM	20
		PR GR PL CH	10 2
Cover Plate for Earth Socket (Schuko Type)	50631 T	BR MF PT LR VD VM	20
		PR GR PL CH	10 2
Cover Plate for Schuko Socket with Safety and Hinged Lid (**IP44**) IP44	50634 T	BR MF PT VM	20
		PR GR PL CH	2
Safety Cover Plate for Single Phase Socket	50622 T	BR MF PT PR GR PL CH	20 2
Cover Plate for Single Phase Socket	50621 T	BR MF PT PR GR PL CH	20 2
Safety Cover Plate for Earth Socket (French Type)	50652 T	BR MF PT LR VD VM	20
		PR GR PL CH	10
NEW Cover Plate for French Socket with Safety and Hinged Lid (**IP44**) IP44	50654 T	BR MF PT PR GR PL CH	20 2

- **T** - Rocker, Cover Plate or Frame.
- **BR** - White; **MF** - Ivory; **PT** - Black; **PR** - Silver; **GR** - Graphite; **PL** - Platinium; **CH** - Champagne; **LR** - Orange; **VD** - Green; **VM** - Red.

SOCKETS

	Ref.	Box (Un)
Earth Socket (Euro-USA Type) 15A - 127V~ / 16A - 250V~	21140	10
NEW Earth Socket (Saudi Type)	21143	10

ROCKERS AND COVER PLATES

	Ref.	Colour	Box (Un)
Safety Cover Plate for Earth Socket (Euro-USA Type)	50842 T	BR MF PT LR VD VM	20
		PR	10
		GR PL CH	2
Cover Plate for Earth Socket (Euro-USA Type)	50841 T	BR MF PT LR VD VM	20
		PR	10
		GR PL CH	2
Safety Cover Plate for Earth Socket (Saudi Type)	50843 T	BR MF PT LR VD VM	20
		PR	20
		GR PL CH	10

OTHER PRODUCTS

	Ref.	Box (Un)
Three Wall Rose ▪ 3x2,5mm² - 250V~.	21173	10
Four Wall Rose ▪ 4x2,5mm² - 250V~.	21174	10
Pilot Light ▪ Máx. 5W (E14) 250V~. ▪ To be used with Lamp Ref. 81012 (page 158).	21360	10
NEW Screw Terminal Loudspeaker Socket	21220	4
Support for Blind Cover	21222	10

ROCKERS AND COVER PLATES

	Ref.	Colour	Box (Un)
Cover Plate for Wall Roses	50671 T	BR MF PT PR GR PL CH	20 2
Transparent Cover for Pilot Light	50781 T	IC LR VD VM	5
Cover Plate for Screw Terminal Loudspeaker Socket	50713 T	BR MF	4
		PT PR GR PL CH	2
Blind Cover Plate	50677 T	BR MF PT PR GR PL CH	20 2

▪ **T** - Rocker, Cover Plate or Frame.
▪ **BR** - White; **MF** - Ivory; **PT** - Black; **PR** - Silver; **GR** - Graphite; **PL** - Platinium; **CH** - Champagne; **IC** - Colourless; **LR** - Orange; **VD** - Green; **VM** - Red.

ACCESSORIES

		Ref.	Colour	Box (Un)
	IP44 **IP44** Kit for MEC 21 Mechanisms - Single Rocker	21981	—	5
	IP44 **IP44** Kit for MEC 21 Mechanisms - Double Rockers	21982	—	5
	Surface Mounting Box for APOLO 5000 Series ▪ To be used in installations with **trunkings of 10 and 16 Series**.	10981 A	BR MF	10
	Cover for Mechanisms Protection	21971	—	40
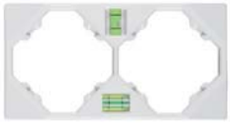	Level and Mounting Accessory for MEC 21 Mechanisms	21989	—	2
	Card for Card-system Switch	21999	—	20
	Universal Cover Ring / Adaptor for 45x45 Modules	50881 T	BR MF PT VM PR GR PL CH	5 2
	Replacement LED for Lighted Mechanisms of MEC 21 / 48 Series - 250V~ ▪ 110/250V~	81019	—	10
	Replacement LED for Lighted Mechanisms of MEC 21 / 48 Series - 12V ▪ 12V	81018	—	10

▪ **T** - Rocker, Cover Plate or Frame; **A** - Acessory.
▪ **BR** - White; **MF** - Ivory; **PT** - Black; **PR** - Silver; **GR** - Graphite; **PL** - Platinium; **CH** - Champagne; **VM** - Red.

ACCESSORIES

	Ref.	Colour	Box (Un)
Automatic Relay for Blinds Control ▪ Rated Voltage: 230V~ - 50Hz. ▪ Breaking Capacity: 6A. ▪ Temporized. ▪ Connect to the Double Push-buttons and to Venetian Double Push-buttons.	81512	—	1
Relay for Blinds Control ▪ Rated Voltage: 230V~ - 50Hz. ▪ Breaking Capacity: 6A. ▪ No Temporized. ▪ Connect locally to Venetian Double Push-button (Ref. 21283). ▪ For the centralized command of the installation, connect remotely to a Venetian Double Push-button (Ref. 21283).	81511	—	1
Infrared Remote Control Transmitter for Blinds Control ▪ 4 groups of Buttons with 2 programmable functions. ▪ It works with 2 AAA batteries, not included.	81901	—	1
Infrared Remote Control Transmitter for Room Thermostat ▪ It works with 2 AAA batteries, not included.	81902	—	1
Blind Face Plate ▪ To be used with F Type Coaxial connectors (page 136).	45970 S	BR MF PT PR GR PL CH	5 2

SEMI-ASSEMBELD DEVICES (Without Connectors)

	Ref.	Colour	Box (Un)
Double RJ45 Computer Socket **Note:** To be used with RJ45 Connectors of the DVI Series (page 136).	50450 S	BR MF PT PR GR PL CH	10 2

COMPLETE DEVICES

	Ref.	Colour	Box (Un)
Monoblock Safety Earth Socket (Schuko Type) with Screwless Terminals NEW 16A - 250V~	50139 C	BR MF PT PR GR PL CH	10
Monoblock Safety Earth Socket (Schuko Type) 16A - 250V~	50138 C	BR MF PT PR GR PL CH	10
Monoblock Earth Socket (Schuko Type) 16A - 250V~	50135 C	BR MF PT PR GR PL CH	10
Monoblock Double Safety Earth Socket (Schuko Type) 16A - 250V~	50332 C	BR MF PT PR GR PL CH	10 2
Monoblock Double Earth Socket (Schuko Type) 16A - 250V~	50331 C	BR MF PT PR GR PL CH	10 2
Monoblock Double Safety Single Phase Socket 16A - 250V~	50322 C	BR MF PT PR GR PL CH	10 2
Monoblock Double Single Phase Socket 16A - 250V~	50321 C	BR MF PT PR GR PL CH	10 2

- **C** - Complete Device.
- **BR** - White; **MF** - Ivory; **PT** - Black; **PR** - Silver; **GR** - Graphite; **PL** - Platinium; **CH** - Champagne.

COMPLETE DEVICES

	Ref.	Colour	Box (Un)
Earth Socket (British Type) NEW 13A - 250V~	50184 C	BR MF PT PR GR PL CH	10 1
Earth Socket (British Type) with Pilot Lamp NEW 13A - 250V~	50183 C	BR MF PT PR GR PL CH	10 2
Double Earth Socket (British Type) 13A - 250V~	50344 C	BR MF PT PR GR PL CH	5 2
Double Earth Socket (British Type) with Pilot Lamp 13A - 250V~	50343 C	BR MF PT PR GR PL CH	5 2
Dimmer / Two-way Switch of 500W ▪ **40 - 500W** - 230V~ - 50Hz incandescent and halogen lamps. ▪ **100 - 400W** - 12/24V~ low voltage halogen lamps connected through magnetic lighting transformers.	50211 C eco	BR MF PT PR GR PL CH	1
Electronic Dimmer / Two-way Switch of 320W ▪ **5-320W** - 230V~ - 50Hz incandescent and halogen lamps. ▪ 12/24V~ low voltage halogen lamps and bulbs connected through electronic lighting transformers.	50212 C eco	BR MF PT PR GR PL CH	1

- **C** - Complete Device.
- **BR** - White; **MF** - Ivory; **PT** - Black; **PR** - Silver; **GR** - Graphite; **PL** - Platinium; **CH** - Champagne.
- eco - The products identified with this symbol improve the saving of energy and contribute to the the energy efficiency of the building.

FRAMES

	Single Frame			Double Horizontal Frame			Double Vertical Frame			Triple Horizontal Frame		
	Ref.	Colour	Box (Un)	Ref.	Colour	Box (Un)	Ref.	Colour	Box (Un)	Ref.	Colour	Box (Un)
STANDARD	50910 T	BR MF PT	20	50921 T	BR MF PT	10	50922 T	BR MF PT	10	50931 T	BR MF PT	10
METALIZED	50910 T	PR GR PL CH	10 5	50921 T	PR GR PL CH	2	50922 T	PR GR PL CH	2	50931 T	PR GR PL CH	2

- **T** - Rocker, Cover Plate or Frame.
- **BR** - White; **MF** - Ivory; **PT** - Black; **PR** - Silver; **GR** - Graphite; **PL** - Platinium; **CH** - Champagne.

Triple Vertical Frame

Four-Gang Horizontal Frame

Four-Gang Vertical Frame

IP44 Waterproof Frame

50961 T

Monoblock for Single Phase Socket

50901 T

Monoblock Cover for Safety Earth Socket (Schuko Type)

50903 T

Monoblock Cover for Earth Socket (Schuko Type)

50902 T

Ref.	Colour	Box (Un)	Ref.	Colour	Box (Un)	Ref.	Colour	Box (Un)	Ref.	Colour	Box (Un)
50932 T	BR MF PT	10	50941 T	BR MF PT	2	50942 T	BR MF PT	2	50961 T	BR MF PT	10
									50901 T		20
									50903 T		20
									50902 T		20
50932 T	PR GR PL CH	2	50941 T	PR GR PL CH	2	50942 T	PR GR PL CH	2	50961 T	PR GR PL CH	2
									50901 T	PR GR PL CH	2
									50903 T	PR GR PL CH	10
									50902 T	PR GR PL CH	10 2

- **T** - Rocker, Cover Plate or Frame.
- **BR** - White; **MF** - Ivory; **PT** - Black; **PR** - Silver; **GR** - Graphite; **PL** - Platinium; **CH** - Champagne.

1 Stereo Channel Sound Control Unit with FM Tuner, Alarm Clock and Infrared Remote Control
LOGUS 90 Series - METALLO (US - Aluminium/Gray**)**

The **Jazz Light Surrounding Sound System** has a wide range of products that allows to project and build all type of Surrounding Sound installations, going from the simplest systems (for houses) to the most complex (for buildings, offices and shopping areas).

All the components of this system are **easy to install**, **simple to use** and they have a **high audio-quality**.

They are possible to decorate with all the finishings existing in the **LOGUS 90**, **Sirius 70**, **APOLO 5000** and **QUADRO 45 Series**, allowing to give a **personal touch** to all the spaces.

FINISHINGS

LOGUS90

1 Stereo Channel Sound Control Unit with FM Tuner,
Alarm Clock and Infrared Remote Control
AQUARELLA (AL - Aluminium**)**

sirius70

1 Stereo Channel Sound Control Unit with FM Tuner,
Alarm Clock and Infrared Remote Control
CLASSIC (MF - Ivory**)**

APOLO 5000

1 Stereo Channel Sound Control Unit with FM Tuner,
Alarm Clock and Infrared Remote Control
METALIZED (GR - Graphite**)**

... also in QUADRO 45 Series

POWER SUPPLIES

	Ref.	Box (Un)
Power Supply Module 15V⎓ 5W ▪ Input: 110/250V~ - 50Hz. ▪ Output: 15V⎓ - 5W. ▪ Capacity to supply 1 Mono or Stereo Sound Control Unit.	21380	1
Power Supply 15V⎓ 30W for DIN Rail Mounting ▪ Input: 110/250V~ - 50/60Hz. ▪ Output: 15V⎓ - 30W. ▪ Capacity to supply 10 Stereo Sound Control Units or 20 Mono Sound Control Units. ▪ Size: 4,5 DIN Modules.	75052	1
Power Supply 15V⎓ 12W for Installation in Hollow Ceilings ▪ Input: 110/250V~ - 50Hz. ▪ Output: 15V⎓ - 12W. ▪ Capacity to supply 4 Stereo Sound Control Units or 8 Mono Sound Control Units. ▪ Possible to mount on the 5" Loudspeaker.	75053	1

COVER PLATES

	Ref.	Colour	Box (Un)
	90670 T	BR MF GE PE AL IS	1
Cover Plate for Power Supply Module	70670 T	BR MF AT	1
	50670 T	BR MF PT PR GR PL CH	1

- **T** - Rocker, Cover Plate or Frame.
- **BR** - White; **MF** - Ivory; **AT** - Anthracite; **PT** - Black; **GE** - Ice; **PE** - Pearl; **AL** - Aluminium; **IS** - Gray; **PR** - Silver; **GR** - Graphite; **PL** - Platinium; **CH** - Champagne.
- For the selection of the frames of the **LOGUS 90 Series** see page 7, of the **Sirius 70 Series** see page 25 and of the **APOLO 5000 Series** see page 43.

MODULAR SOUND CENTRAL UNITS

		Ref.	Box (Un)
	1 Stereo Channel Modular Sound Central Unit	21391	1
	1 Stereo Channel Modular Sound Central Unit with FM Tuner	21392	1
	3 Stereo Channel Auxiliary Input Module	21393	1

COVER PLATES

		Ref.	Colour	Box (Un)
		90851 T	BR MF GE PE AL IS	1
	Cover Plate for 1 Stereo Channel Modular Sound Central Unit	70851 T	BR MF AT	1
		50851 T	BR MF PT PR GR PL CH	1
		90852 T	BR MF GE PE AL IS	1
	Cover Plate for 1 Stereo Channel Modular Sound Central Unit with FM Tuner	70852 T	BR MF AT	1
		50852 T	BR MF PT PR GR PL CH	1
		90853 T	BR MF GE PE AL IS	1
	Cover Plate for 3 Stereo Channel Auxiliary Input Module	70853 T	BR MF AT	1
		50853 T	BR MF PT PR GR PL CH	1

EFAPEL

- **T** - Rocker, Cover Plate or Frame.
- **BR** - White; **MF** - Ivory; **AT** - Anthracite; **PT** - Black; **GE** - Ice; **PE** - Pearl; **AL** - Aluminium; **IS** - Gray; **PR** - Silver; **GR** - Graphite; **PL** - Platinium; **CH** - Champagne.
- For the selection of the frames of the **LOGUS 90 Series** see page 7, of the **Sirius 70 Series** see page 25 and of the **APOLO 5000 Series** see page 43.

SOUND CONTROL UNITS

FM SOUND CONTROL UNITS

	Ref.	Box (Un)
1 Stereo Channel Sound Control Unit with FM Tuner, Alarm Clock and Infrared Remote Control	21370	1
1 Stereo Channel Sound Control Unit with FM Tuner and Alarm Clock	21379	1
1 Stereo Channel Sound Control Unit with FM Tuner	21377	1

COVER PLATES

	Ref.	Colour	Box (Un)
	90715 T	BR MF GE PE AL IS	2 1
Cover Plate for 1 Stereo Channel Sound Control Unit with FM Tuner, Alarm Clock and Infrared Remote Control	70715 T	BR MF AT	2
	50715 T	BR MF PT PR GR PL CH	2
	90709 T	BR MF GE PE AL IS	2 1
Cover Plate for 1 Stereo Channel Sound Control Unit with FM Tuner and Alarm Clock	70709 T	BR MF AT	2
	50709 T	BR MF PT PR GR PL CH	2 1
	90707 T	BR MF GE PE AL IS	2 1
Cover Plate for 1 Stereo Channel Sound Control Unit with FM Tuner	70707 T	BR MF AT	2
	50707 T	BR MF PT PR GR PL CH	2 1

- **T** - Rocker, Cover Plate or Frame.
- **BR** - White; **MF** - Ivory; **AT** - Anthracite; **PT** - Black; **GE** - Ice; **PE** - Pearl; **AL** - Aluminium; **IS** - Gray; **PR** - Silver; **GR** - Graphite; **PL** - Platinium; **CH** - Champagne.
- For the selection of the frames of the **LOGUS 90 Series** see page 7, of the **Sirius 70 Series** see page 25 and of the **APOLO 5000 Series** see page 43.

FM SOUND CONTROL UNITS

	Ref.	Box (Un)
1 Mono Channel Sound Control Unit with FM Tuner	21373	1
4 Mono Channels Sound Control Unit with FM Tuner	21378	1

COVER PLATES

	Ref.	Colour	Box (Un)
	90703 T	BR MF GE PE AL IS	2 1
Cover Plate for 1 Mono Channel Sound Control Unit with FM Tuner	70703 T	BR MF AT	2
	50703 T	BR MF PT PR GR PL CH	2 1
	90708 T	BR MF GE PE AL IS	2 1
Cover Plate for 4 Mono Channels Sound Control Unit with FM Tuner	70708 T	BR MF AT	2
	50708 T	BR MF PT PR GR PL CH	2 1

- **T** - Rocker, Cover Plate or Frame.
- **BR** - White; **MF** - Ivory; **AT** - Anthracite; **PT** - Black; **GE** - Ice; **PE** - Pearl; **AL** - Aluminium; **IS** - Gray; **PR** - Silver; **GR** - Graphite; **PL** - Platinium; **CH** - Champagne.
- For the selection of the frames of the **LOGUS 90 Series** see page 7, of the **Sirius 70 Series** see page 25 and of the **APOLO 5000 Series** see page 43.

SURROUNDING SOUND SYSTEM

SOUND CONTROL UNITS

	Ref.	Box (Un)
1 Stereo Channel Sound Control Unit	21372	1
1 Mono Channel Sound Control Unit	21371	1
4 Mono Channels Sound Control Unit	21374	1

COVER PLATES

	Ref.	Colour	Box (Un)
	90702 T	BR MF GE PE AL IS	2 1
Cover Plate for 1 Stereo Channel Sound Control Unit	70702 T	BR MF AT	2
	50702 T	BR MF PT PR GR PL CH	2 1
	90700 T	BR MF GE PE AL IS	2 1
Cover Plate for 1 Mono Channel Sound Control Unit	70700 T	BR MF AT	2
	50700 T	BR MF PT PR GR PL CH	2 1
	90704 T	BR MF GE PE AL IS	2 1
Cover Plate for 4 Mono Channels Sound Control Unit	70704 T	BR MF AT	2
	50704 T	BR MF PT PR GR PL CH	2 1

- **T** - Rocker, Cover Plate or Frame.
- **BR** - White; **MF** - Ivory; **AT** - Anthracite; **PT** - Black; **GE** - Ice; **PE** - Pearl; **AL** - Aluminium; **IS** - Gray; **PR** - Silver; **GR** - Graphite; **PL** - Platinium; **CH** - Champagne.
- For the selection of the frames of the **LOGUS 90 Series** see page 7, of the **Sirius 70 Series** see page 25 and of the **APOLO 5000 Series** see page 43.

COMPLEMENTARY SOUND CONTROL UNITS

	Ref.	Box (Un)
4 Stereo Channels Selector Module ▪ To be installed with 1 Stereo Channel Sound Control Unit in installations with Modular Sound Central Units with 3 Stereo Channel Auxiliary Input Module.	21385	1

COVER PLATES

	Ref.	Colour	Box (Un)
	90705 T	BR MF GE PE AL IS	2 1
Cover Plate for 4 Stereo Channels Selector Module	70705 T	BR MF AT	2
	50705 T	BR MF PT PR GR PL CH	2 1

LOUDSPEAKERS

FLUSH MOUNTING LOUDSPEAKERS OF 2"

	Ref.	Box (Un)
Loudspeaker of 2" - 32 Ohm ▪ Maximum Power: 10W. ▪ Frequency Response: 450 - 5000Hz.	21581	1

COVER PLATES

	Ref.	Colour	Box (Un)
	90710 T	BR MF GE PE AL IS	2 1
Cover Plate for Loudspeaker of 2" - 32 Ohm	70710 T	BR MF AT	2
	50710 T	BR MF PT PR GR PL CH	2 1

FLUSH MOUNTING LOUDSPEAKERS OF 5″ AND OF 6,5″

	Ref.	Colour	Box (Un)
Loudspeaker of 5″ - 32 Ohm for Ceiling Mounting	75023 C	BR MF	1
Loudspeaker of 5″ - 16 Ohm for Ceiling Mounting	75022 C	BR MF	1
Loudspeaker of 5″ - 8 Ohm for Ceiling Mounting	75021 C	BR MF	1

	Ref.	Colour	Box (Un)
Squared Grid 2-Way Loudspeaker of 6,5″ - 32 Ohm ▪ Dimensions (mm): 204 x 204 x 92. ▪ Maximum Power: 60W. ▪ Frequency Response: 60 - 20000Hz.	75083 C	BR MF	1
Squared Grid 2-Way Loudspeaker of 6,5″ - 16 Ohm ▪ Dimensions (mm): 204 x 204 x 92. ▪ Maximum Power: 60W. ▪ Frequency Response: 60 - 20000Hz.	75082 C	BR MF	1
Squared Grid 2-Way Loudspeaker of 6,5″ - 8 Ohm ▪ Dimensions (mm): 204 x 204 x 92. ▪ Maximum Power: 60W. ▪ Frequency Response: 60 - 20000Hz.	75081 C	BR MF	1

SURFACE MOUNTING LOUDSPEAKERS OF 5″

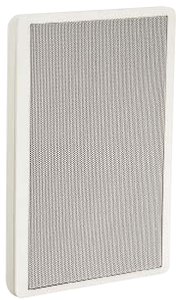

	Ref.	Colour	Box (Un)
Surface Mounting Flat 2-Way Loudspeaker of 5″ - 32 Ohm ▪ Dimensions (mm): 270 x 183 x 37. ▪ Maximum Power: 15W. ▪ Frequency Response: 80 - 19000Hz.	75106 C	BR	1
Surface Mounting Flat 2-Way Loudspeaker of 5″ - 16 Ohm ▪ Dimensions (mm): 270 x 183 x 37. ▪ Maximum Power: 15W. ▪ Frequency Response: 80 - 19000Hz.	75105 C	BR	1
Surface Mounting Flat 2-Way Loudspeaker of 5″ - 8 Ohm ▪ Dimensions (mm): 270 x 183 x 37. ▪ Maximum Power: 15W. ▪ Frequency Response: 80 - 19000Hz.	75104 C	BR	1

▪ **C** - Complete Device.
▪ **BR** - White; **MF** - Ivory.

ACCESSORIES

	Ref.	Colour	Box (Un)
Stereo / Mono Amplifier ▪ Output Power: Stereo: 5W + 5W (4 Ohm); Mono: 8W (8 Ohm). ▪ Rated Voltage: 15V⎓. ▪ Function: Stand by. ▪ Possible to mount on the Loudspeaker of 5". ▪ Amplifies the audio signal coming from a Sound Control Unit allowing connecting from 8 to 16 Loudspeakers to a Mono Sound Control Unit and from 10 to 16 Loudspeakers to a Stereo Sound Control Unit.	75032	—	1
Flush Mounting Ceiling Box for Loudspeaker of 5" ▪ Dimensions (mm): ø 165, P=64.	75983	—	10
Flush Mounting Deep Ceiling Box for Loudspeaker of 5" and Stereo/Mono Amplifiers ▪ Dimensions (mm): ø 165, P=92.	75984	—	10
Flush Mounting Box for Squared Grid 2-Way Loudspeakers ▪ Dimensions (mm): 227,8 x 227,8 x 119.	75986	—	2
Lid to Pre-installation for Loudspeaker of 5" ▪ Dimensions (mm): ø 173.	75999 A	BR	2
Infrared Remote Control Transmitter for Sound System ▪ For FM Sound Control Unit - Ref. 21370. ▪ It works with 2 AAA batteries, not included.	75985	—	1

▪ **A** - Accessory.
▪ **BR** - White.

WATERPROOF 48
series

IP65

IK07

Single Pole Switch
CZ - Grey

Provided with a protection degree of **IP65**, the **48 WATERPROOF Series** is the right choice for electrical installations in **wet** and **dusty environments**.

Entirely manufactured in **thermoplastic** materials with high resistance to the weathering, the "all-terrain" of ***EFAPEL*** is extremely **robust** and **resistant**, which makes it the best solution for installations in **industrial areas, garages** or **gardens**.

Available in the **White** (RAL 9003) and **Grey** (RAL 7035) colours, the **48 WATERPROOF Series** is a versatile series with 31 functions which can also be assembled in single or double bases and in vertical or horizontal positions.

CONTROL DEVICES

	Ref.	Colour	Box (Un)
Single Pole Switch 16AX - 250V~	48011 C	CZ BR	10
Single Pole Switch with Orienting Light 16AX - 250V~ ▪ To control electronic energy-saving lamps, we recommend the use of capacitors of 0,15µF 275V~ connected in parallel to the load to avoid the blinking in the lamp when the contact is open. ▪ Replacement LED available on page 77.	48012 C	CZ BR	10
Single Pole Switch with Pilot Lamp 16AX - 250V~ ▪ Replacement LED available on page 77.	48013 C	CZ BR	10
Two-pole Switch 16AX - 250V~	48021 C	CZ BR	10
Two-pole Switch with Pilot Lamp 16AX - 250V~ ▪ Replacement LED available on page 77.	48023 C	CZ BR	10
Two Circuits Switch 16AX - 250V~	48061 C	CZ BR	10
Two-way Switch 16AX - 250V~	48071 C	CZ BR	10
Two-way Switch with Orienting Light 16AX - 250V~ ▪ To control electronic energy-saving lamps, we recommend the use of capacitors of 0,15µF 275V~ connected in parallel to the load to avoid the blinking in the lamp when the contact is open. ▪ Replacement LED available on page 77.	48072 C	CZ BR	10
Two-way Switch with Pilot Lamp 16AX - 250V~ ▪ Replacement LED available on page 77.	48073 C	CZ BR	10

▪ **C** - Complete Device.
▪ **CZ** - Grey; **BR** - White.

WATERPROOF 48
series

CONTROL DEVICES

	Ref.	Colour	Box (Un)
Double Two-way Switch 16AX - 250V~	48101 C	CZ BR	10
Intermediate Switch 16AX - 250V~	48051 C	CZ BR	10
Intermediate Switch with Orienting Light 16AX - 250V~ ▪ To control electronic energy-saving lamps, we recommend the use of capacitors of 0,15µF 275V~ connected in parallel to the load to avoid the blinking in the lamp when the contact is open. ▪ Replacement LED available on page 77.	48052 C	CZ BR	10
Rocker Push-button 16A - 250V~	48151 C	CZ BR	10
Rocker Push-button with Orienting Light (250V) 16A - 250V~ ▪ Replacement LED available on page 77.	48152 C	CZ BR	10
Rocker Push-button with Orienting Light (12V) 6A - 12V ▪ Replacement LED available on page 77.	48162 C	CZ BR	10
Venetian Switch 16A - 250V~ ▪ Switch function. ▪ Electrical and Mechanical Blockade against the appearance of two simultaneous orders. ▪ Toggles automatically one rocker when the other is pressed.	48290 C	CZ BR	10
Venetian Double Push-button 16A - 250V~ ▪ Push-button function. ▪ Electrical and Mechanical Blockade against the appearance of two simultaneous orders.	48281 C	CZ BR	10
Venetian Double Push-button for multiple points Blinds Control 16A - 250V~ ▪ Push-button function. ▪ Electrical and Mechanical Blockade against the appearance of two simultaneous orders.	48283 C	CZ BR	10

▪ **C** - Complete Device.
▪ **CZ** - Grey; **BR** - White.

ENERGY SOCKETS

	Ref.	Colour	Box (Un)
Safety Earth Socket (Schuko Type) 16A - 250V~	48132 C	CZ BR	10
Earth Socket (Schuko Type) 16A - 250V~	48131 C	CZ BR	10
Safety Earth Socket (French Type) 16A - 250V~	48112 C	CZ BR	10
Safety Single Phase Socket 16A - 250V~	48122 C	CZ BR	10
Two Safety Earth Sockets (Schuko Type) in a Double Horizontal Base 16A - 250V~	48865 C	CZ BR	5
Two Earth Sockets (Schuko Type) in a Double Horizontal Base 16A - 250V~	48862 C	CZ BR	5
Two-way Switch + Safety Earth Socket (Schuko Type) in a Double Vertical Base 16A - 250V~	48866 C	CZ BR	5
Two-way Switch + Earth Socket (Schuko Type) in a Double Vertical Base 16A - 250V~	48861 C	CZ BR	5

- **C** - Complete Device.
- **CZ** - Grey; **BR** - White.

WATERPROOF 48
series

OTHER PRODUCTS

	Ref.	Colour	Box (Un)
Pilot Light (High Height) Max. 5W / 250V~ (E14) ▪ To be used with Lamp Ref. 81011 (page 158).	48361 C	ZI ZR ZV ZM BI BJ BV BM	2
Pilot Light (Low Height) Max. 5W / 250V~ (E14) ▪ To be used with Lamp Ref. 81012 (page 158).	48362 C	ZI ZR ZV ZM BI BJ BV BM	2
Interface for Telephone Bell ▪ From 0,045A to 1,3A 230V~.	48461 C	CZ BR	1
Box for Push-button Devices of ø22mm ▪ The Protection Degree of the Box for Equipments ø22 (**IP65**) is guaranted only when using control and signalling devices whose Protection Degree is not lower.	48992 A	CZ BR	10
Single Base	48990 A	CZ BR	5
Double Horizontal Base	48994 A	CZ BR	5
Double Vertical Base	48995 A	CZ BR	5
48 Series Box with Cover for QUADRO 45 Series ▪ Allows to adapt the QUADRO 45 functions to the WATERPROOF 48 Series (except Motion Detectors).	48998 C	CZ BR	4
Replacement LED for Lighted Mechanisms of MEC 21 / 48 Series - 250V~ ▪ 110/250V~	81019	—	10
Replacement LED for Lighted Mechanisms of MEC 21 / 48 Series - 12V ▪ 12V	81018	—	10

▪ **A** - Accessory; **C** - Complete Device.
▪ **CZ** - Grey; **BR** - White.
▪ Pilot Lights: **ZI** - Grey/Colourless; **ZR** - Grey/Orange; **ZV** - Grey/Green; **ZM** - Grey/Red.
BI - White/Colourless; **BJ** - White/Orange; **BV** - White/Green; **BM** - White/Red.

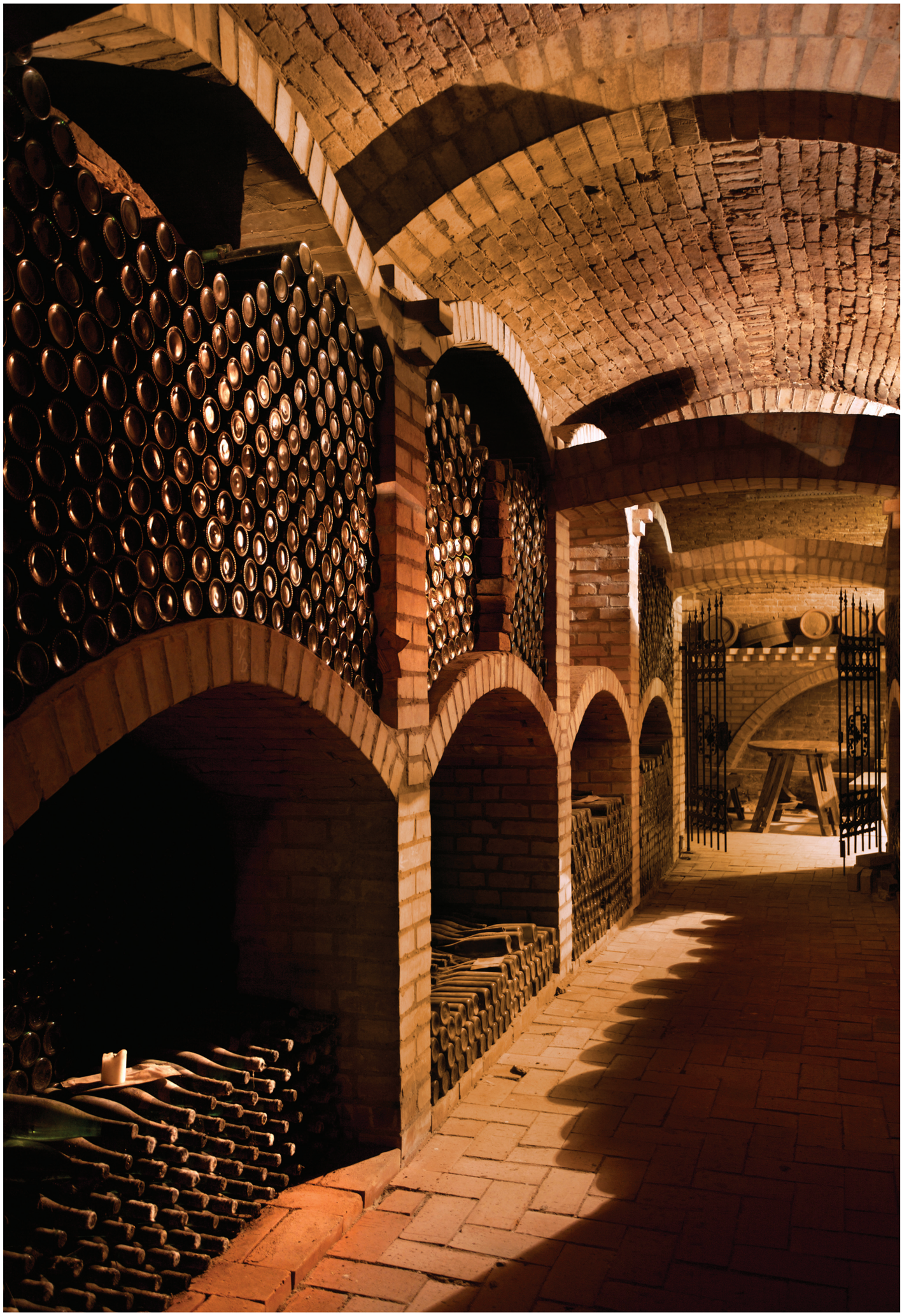

Single Pole Switch
MF - Ivory

The **2600 Series** is famous by its **easy assembly** and it is the ideal product for carrying out **surface mounting electrical installations** in house remodelling.

Simple and **discreet**, it is the right choice for **rustic spaces**.

It is available in **Ivory** colour and in 12 basic functions.

CONTROL DEVICES

	Ref.	Colour	Box (Un)
Single Pole Switch 10AX - 250V~	26011 C	MF	10
Two-Pole Switch 10AX - 250V~	26021 C	MF	10
Two Circuits Switch 10AX - 250V~	26061 C	MF	10
Two-way Switch 10AX - 250V~	26071 C	MF	10
Double Two-way Switch 10AX - 250V~	26101 C	MF	10
Intermediate Switch 10AX - 250V~	26051 C	MF	10
Push-button Switch 10A - 250V~	26157 C	MF	10
Push-button Switch with Orienting Light (250V) 2A - 250V~	26158 C	MF	10

- **C** - Complete Device.
- **MF** - Ivory.
- The 2600 Series must be used with "patére" in insulating material.

ENERGY SOCKETS

	Ref.	Colour	Box (Un)
Safety Earth Socket (Schuko Type) 16A - 250V~	26132 C	MF	10
Earth Socket (Schuko Type) 16A - 250V~	26131 C	MF	10
Safety Single Phase Socket 16A - 250V~	26122 C	MF	10
Single Phase Socket 16A - 250V~	26121 C	MF	10

- **C** - Complete Device.
- **MF** - Ivory.
- The 2600 Series must be used with "patére" in insulating material.

Single Pole Switch
BR - White

The **3700 Series** is the **versatile option** for installations in **professional** or **institutional spaces** like offices, schools, commerce, etc.

With a **discreet design**, the **3700 Series** can be applied alone in **surface mounting installations** and together with the **10 Series of Cable-trunkings for Electrical and Telecommunications Installations**.

It is available in **White** colour (RAL 9003) and it has a wide range of functions with 38 basic functions.

CONTROL DEVICES

	Ref.	Colour	Box (Un)
Single Pole Switch 10AX - 250V~	37011 C	BR	10
Single Pole Switch with Orienting Light 10AX - 250V~ ▪ To control electronic energy-saving lamps, we recommend the use of capacitors of 0,15µF 275V~ connected in parallel to the load to avoid the blinking in the lamp when the contact is open.	37012 C	BR	10
Single Pole Switch with Pilot Lamp 10AX - 250V~	37013 C	BR	10
Two Circuits Switch 10AX - 250V~	37061 C	BR	10
Two-way Switch 10AX - 250V~	37071 C	BR	10
Two-way Switch with Orienting Light 10AX - 250V~ ▪ To control electronic energy-saving lamps, we recommend the use of capacitors of 0,15µF 275V~ connected in parallel to the load to avoid the blinking in the lamp when the contact is open.	37072 C	BR	10
Two-way Switch with Pilot Lamp 10AX - 250V~	37073 C	BR	10
Double Two-way Switch 10AX - 250V~	37101 C	BR	10

▪ **C** - Complete Device.
▪ **BR** - White.

CONTROL DEVICES

	Ref.	Colour	Box (Un)
Intermediate Switch 10A - 250V~	37051 C	BR	10
Rocker Push-button Switch 10A - 250V~	37151 C	BR	10
Rocker Push-button Switch with Orienting Light 10A - 250V~	37152 C	BR	10
Push-button Switch 10A - 250V~	37157 C	BR	10
Push-button Switch with Orienting Light (250V) 2A - 250V~	37158 C	BR	10
Push-button Switch with Orienting Light (12V) 6A - 12V	37168 C	BR	10
Venetian Switch 10A - 250V~ ▪ Switch function. ▪ Electrical and Mechanical Blockade against the appearance of two simultaneous orders. ▪ Toggles automatically one rocker when the other is pressed.	37290 C	BR	10
Venetian Double Push-button 10A - 250V~ ▪ Push-button function. ▪ Electrical and Mechanical Blockade against the appearance of two simultaneous orders.	37281 C	BR	10

▪ **C** - Complete Device.
▪ **BR** - White.

DATA SOCKETS

	Ref.	Colour	Box (Un)
Single RJ45 Cat. 6 UTP Computer Socket	37455 C	BR	10
Single RJ45 Cat. 6 STP Computer Socket	37445 C	BR	10
Single RJ45 Cat. 5e UTP Computer Socket	37453 C	BR	10
Single RJ45 Cat. 5e STP Computer Socket	37443 C	BR	10

TELEPHONE SOCKETS

	Ref.	Colour	Box (Un)
50V ⎓70V~			
Telephone Socket (RITA)	37251 C	BR	10
Telephone Socket (4 Conductors)	37252 C	BR	10
Telephone Socket (6 Conductors)	37253 C	BR	10
8 contacts			
T8 French Telephone Socket	37411 C	BR	10

- **C** - Complete Device.
- **BR** - White.

RADIO, TELEVISION AND SATELLITE SOCKETS

	Ref.	Colour	Box (Un)
Radio and Televison Sockets			
Equalized R - TV Socket for Star Connection (Terminal Type) ▪ Coaxial Connector ø 9,5. ▪ 4 - 862 MHz. ▪ Insertion Losses: ≤ 0,5dB.	37531 C	BR	10
Equalized R - TV Socket for Series Connection (Crossover Type) ▪ Coaxial Connector ø 9,5. ▪ 4 - 862 MHz. ▪ Insertion Losses: ≤ 6dB. ▪ Flow: ≤ 2dB.	37532 C	BR	10
Radio, Televison and Satellite Sockets			
R TV - SAT Socket for Star Connection ▪ Coaxial Connector ø 9,5. ▪ 4 - 470 MHz. ▪ Insertion Losses: ≤ 1dB. ▪ 470 - 822 MHz. ▪ Insertion Losses: ≤ 2dB. ▪ 822 - 862 MHz. ▪ Insertion Losses: ≤ 6dB. ▪ Current Flow: 500mA.	37550 C	BR	10
Coaxial F Computer Socket	37431 C	BR	1

ENERGY SOCKETS

	Ref.	Colour	Box (Un)
Safety Earth Socket (Schuko Type) 16A - 250V~	37132 C	BR LR VM	10
Earth Socket (Schuko Type) 16A - 250V~	37131 C	BR LR VM	10
Safety Single Phase Socket 16A - 250V~	37122 C	BR	10
Single Phase Socket 16A - 250V~	37121 C	BR	10
Safety Earth Socket (French Type) 16A - 250V~	37112 C	BR	10
Earth Socket (French Type) 16A - 250V~	37111 C	BR	10

OTHER PRODUCTS

	Ref.	Colour	Box (Un)
Wall Rose ▪ Without Connectors.	37170 C	BR	10
Junction Box ▪ 4x2,5mm².	37201 C	BR	10
Pilot Light ▪ Max. 5W / 250V~ (E14). ▪ To be used with Lamp Ref. 81012 (page 158).	37360 C	BI BJ BV BM	2
Stereo Music Socket ▪ Connector DIN 41529.	37221 C	BR	10

▪ **C** - Complete Device.
▪ **BR** - White; **LR** - Orange; **VM** - Red; **BI** - White/Colourless; **BJ** - White/Oranje; **BV** - White/Green; **BM** - White/Red.

ADAPTERS FOR 10 SERIES CABLE-TRUNKINGS

	Ref.	Colour	Box (Un)
3700 Series Adapter for **12x7** Trunking	10017 A	BR	20
3700 Series Adapter for **16x10** Trunking	10027 A	BR	20
3700 Series Adapter for **20x12,5** Trunking	10037 A	BR	20
3700 Series Adapter for **32x16** Trunking	10047 A	BR	20
3700 Series Adapter for **40x12,5** Trunking	10057 A	BR	20
3700 Series Adapter for **40x16** Trunking	10067 A	BR	10
3700 Series Adapter for **60x16** Trunking	10077 A	BR	10
3700 Series Adapter for **110x20** Skirt Trunking	10107 A	BR	4
3700 Series Adapter for **75x20** Trunking	10147 A	BR	10

- **A** - Accessory.
- **BR** - White.
- See **10 Series** - Cable-trunkings for Electrical and Telecommunications Installations - Miniature Cable-trunkings (from page 114 to 117) and Skirt Cable-trunkings (page 118).

Block of Three Earth Sockets (Schuko Type) Mounted in a Triple Adapter for Cable-trunkings with Cover of 60mm width (L60)
BR - White

The **QUADRO 45 Series** is the **simple** and **practical** option for the **installation** of **electrical** and **telecommunication products in cable-trunkings**.

This series has a range of modules with the **square format of 45x45mm** and it has also **single**, **double** and **triple lateral and frontal adapters** which allows a **perfect assembly** and **finishing** when they are installed in the **10** and **16 Series of Cable-trunkings**.

The **QUADRO 45 Series** also has different types of **Pre-cabled Double** and **Triple Sockets Blocks** which makes their installation easy and with reduction of assembly time.

ENERGY SOCKETS

	Ref.	Colour	Box (Un)
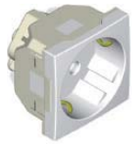 Safety Earth Socket (Schuko Type) 16A - 250V~	45132 S	BR LR VD VM	10
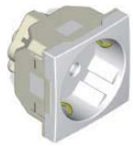 Earth Socket (Schuko Type) 16A - 250V~	45131 S	BR LR VD VM	10
Earth Socket (Schuko Type) with Blockage 16A - 250V~ ▪ With electrical Shock protection.	45136 S	VM	10
Earth Socket (Schuko Type) with Blockage and Signal Light 16A - 250V~ ▪ With electrical Shock protection.	45137 S	VM	10
Safety Earth Socket (French Type) 16A - 250V~	45112 S	BR LR VD VM	10
Earth Socket (French Type) 16A - 250V~	45111 S	BR LR VD VM	10
Earth Socket (French Type) with Blockage 16A - 250V~ ▪ With electrical Shock protection.	45116 S	VM	10
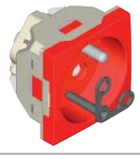 Earth Socket (French Type) with Blockage and Signal Light 16A - 250V~ ▪ With electrical Shock protection.	45117 S	VM	10
Safety Earth Socket (Euro-USA Type) 15A - 127V~ / 16A - 250V~	45142 S	BR VM	10
Earth Socket (Euro-USA Type) 15A - 127V~ / 16A - 250V~	45140 S	BR VM	10
Earth Socket (Saudi Type) 15A - 127V~ NEW	45144 S	BR VM	10

▪ **S** - Semi-assembled.
▪ **BR** - White; **LR** - Orange; **VD** - Green; **VM** - Red.

PRE-CABLED DOUBLE AND TRIPLE SOCKETS (Without Adapter)

	Ref.	Colour	Box (Un)
Block of Two Safety Earth Sockets (Schuko Type) 16A - 250V~	45192 S	BR VM	10
Block of Two Earth Sockets (Schuko Type) 16A - 250V~	45190 S	BR VM	10
Block of Two Safety Earth Sockets (French Type) 16A - 250V~	45193 S	BR VM	10
Block of Two Earth Sockets (French Type) 16A - 250V~	45191 S	BR VM	10
Block of Three Safety Earth Sockets (Schuko Type) 16A - 250V~	45196 S	BR VM	10
Block of Three Earth Sockets (Schuko Type) 16A - 250V~	45194 S	BR VM	10
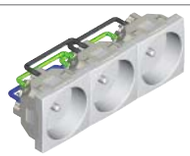 Block of Three Safety Earth Sockets (French Type) 16A - 250V~	45197 S	BR VM	10
Block of Three Earth Sockets (French Type) 16A - 250V~	45195 S	BR VM	10

MONOBLOCK SOCKETS FOR TRUNKINGS WITH COVERS OF 60mm (L60) AND 75mm (L75) WIDTH

	Ref.	Colour	Box (Un)
Monoblock Safety Earth Socket (Schuko Type) with Adapter for Trunkings with Covers of 60/75mm width 16A - 250V~	45138 C	BR VM	10
Monoblock Earth Socket (Schuko Type) with Adapter for Trunkings with Covers of 60/75mm width 16A - 250V~	45135 C	BR VM	10

- **C** - Complete Device; **S** - Semi-assembled.
- **BR** - White; **VM** - Red.
- Trunkings with Covers of L60 and L75 width on pages 122 to 129.

MONOBLOCK SOCKETS
FOR TRUNKINGS WITH COVERS OF 60mm (L60) AND 75mm (L75) WIDTH

	Ref.	Colour	Box (Un)
Monoblock Safety Earth Socket (French Type) with Adapter for Trunkings with Covers of 60/75mm width 16A - 250V~	45118 C	BR VM	10
Monoblock Earth Socket (French Type) with Adapter for Trunkings with Covers of 60/75mm width 16A - 250V~	45115 C	BR VM	10

PRE-CABLED DOUBLE AND TRIPLE MONOBLOCK SOCKETS
FOR TRUNKINGS WITH COVERS OF 60mm (L60) WIDTH

	Ref.	Colour	Box (Un)
Block of Two Safety Earth Sockets (Schuko Type) with Adapters for Trunkings with Covers of 60mm width 16A - 250V~	45273 C	BR VM	10
Block of Two Earth Sockets (Schuko Type) with Adapters for Trunkings with Covers of 60mm width 16A - 250V~	45270 C	BR VM	10
Block of Two Safety Earth Sockets (French Type) with Adapters for Trunkings with Covers of 60mm width 16A - 250V~	45274 C	BR VM	10
Block of Two Earth Sockets (French Type) with Adapters for Trunkings with Covers of 60mm width 16A - 250V~	45272 C	BR VM	10
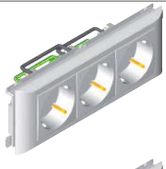 Block of Three Safety Earth Sockets (Schuko Type) with Adapters for Trunkings with Covers of 60mm width 16A - 250V~	45277 C	BR VM	10
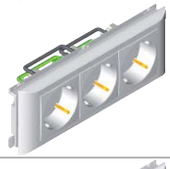 Block of Three Earth Sockets (Schuko Type) with Adapters for Trunkings with Covers of 60mm width 16A - 250V~	45275 C	BR VM	10
Block of Three Safety Earth Sockets (French Type) with Adapters for Trunkings with Covers of 60mm width 16A - 250V~	45278 C	BR VM	10
Block of Three Earth Sockets (French Type) with Adapters for Trunkings with Covers of 60mm width 16A - 250V~	45276 C	BR VM	10

- **C** - Complete Device.
- **BR** - White; **VM** - Red.
- Trunkings with Covers of L60 and L75 width on pages 122 to 129.

PRE-CABLED DOUBLE AND TRIPLE MONOBLOCK SOCKETS FOR TRUNKINGS WITH COVERS OF 75mm (L75) WIDTH

	Ref.	Colour	Box (Un)
Block of Two Safety Earth Sockets (Schuko Type) with Adapters for Trunkings with Covers of 75mm width 16A - 250V~	45262 C	BR VM	10
Block of Two Earth Sockets (Schuko Type) with Adapters for Trunkings with Covers of 75mm width 16A - 250V~	45260 C	BR VM	10
Block of Two Safety Earth Sockets (French Type) with Adapters for Trunkings with Covers of 75mm width 16A - 250V~	45263 C	BR VM	10
Block of Two Earth Sockets (French Type) with Adapters for Trunkings with Covers of 75mm width 16A - 250V~	45261 C	BR VM	10
Block of Three Safety Earth Sockets (Schuko Type) with Adapters for Trunkings with Covers of 75mm width 16A - 250V~	45266 C	BR VM	10
Block of Three Earth Sockets (Schuko Type) with Adapters for Trunkings with Covers of 75mm width 16A - 250V~	45264 C	BR VM	10
Block of Three Safety Earth Sockets (French Type) with Adapters for Trunkings with Covers of 75mm width 16A - 250V~	45267 C	BR VM	10
Block of Three Earth Sockets (French Type) with Adapters for Trunkings with Covers of 75mm width 16A - 250V~	45265 C	BR VM	10

VOICE AND DATA SOCKETS

	Ref.	Colour	Box (Un)
Module with 1 RJ45 Cat. 6 UTP Connector	45978 S	BR	5
Module with 1 RJ45 Cat. 5e UTP Connector	45975 S	BR	5
Module with 1 RJ11 Cat. 3 Connector	45972 S	BR	5

- **C** - Complete Device; **S** - Semi-assembled.
- **BR** - White; **VM** - Red.
- Trunkings with Covers of L60 and L75 width on pages 122 to 129.

VOICE AND DATA SOCKETS

	Ref.	Colour	Box (Un)
Module with 1 RJ45 Cat. 6 STP Connector	45988 S	BR	5
Module with 1 RJ45 Cat. 5e STP Connector	45985 S	BR	5
Module with One Coaxial Type F Connector	45979 S	BR	5

ACCESSORIES FOR VOICE AND DATA SOCKETS

	Ref.	Colour	Box (Un)
Face Plate for Two RJ Connectors (Whitout Connectors) ▪ To be used with RJ Keystone Type Connector (page 136).	45971 S	BR	10
Face Plate for One RJ Connector (Whitout Connectors) ▪ To be used with RJ Keystone Type Connector (page 136).	45976 S	BR	10
Face Plate for One RJ45 Connector (Whitout Connectors) ▪ To be used with RJ Keystone Type Connector (page 136).	45977 S	BR	20
Blind Face Plate ▪ To be used with Coaxial Type F Connector (page 136).	45970 S	BR	5

COUPLERS FOR FIBRE OPTIC CONNECTORS

	Ref.	Colour	Box (Un)
NEW Module with Coupler for SC APC Duplex Fibre Optic Connector	45448 S	BR	10
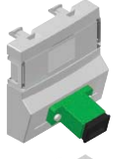 NEW Module with Coupler for SC APC Simplex Fibre Optic Connector	45447 S	BR	10
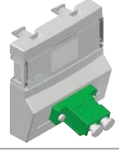 NEW Module with Coupler for LC Duplex Fibre Optic Connector	45449 S	BR	10

▪ **S** - Semi-assembled.
▪ **BR** - White.

RADIO, TELEVISION AND SATELLITE SOCKETS

	Ref.	Colour	Box (Un)
STAR CONNECTION			
R - TV - SAT Socket for Star Connection (NEW) ▪ 4 - 862 MHz: < 1dB. ▪ 950 - 2400 MHz: < 3dB. ▪ Current Flow of 600 mA (DC).	45543 S	BR	10
R - TV Socket for Star Connection (NEW) ▪ 4 - 82 MHz: < 1dB. ▪ 84 - 108 MHz: < 2dB. ▪ 112 - 1000 MHz: < 1dB.	45533 S	BR	10
SERIES CONNECTION			
R - TV - SAT Socket (Terminal Type) (NEW) ▪ 4 - 2400 MHz: < 5dB. ▪ Current Flow of 500 mA (DC).	45555 S	BR	10
R - TV - SAT Socket (Crossover Type) (NEW) ▪ 4 - 2400 MHz: < 9dB. ▪ Current Flow of 500 mA (DC). ▪ Insertion Losses: 2dB.	45565 S	BR	10
R - TV Socket (Terminal Type) (NEW) ▪ 4 - 82 MHz: < 5dB. ▪ 84 - 108 MHz: < 6dB. ▪ 112 - 1000 MHz: < 5dB.	45554 S	BR	10
R - TV Socket (Crossover Type) (NEW) ▪ 4 - 1000 MHz: < 9dB.	45564 S	BR	10

BLINDS CONTROL MODULES WITH INFRARED REMOTE CONTROL

	Ref.	Colour	Box (Un)
General Blinds Control Module with Infrared Remote Control ▪ Rated Voltage: 230V~ - 50Hz. ▪ Breaking Capacity: 6A. ▪ Remote control through an IR transmitter (Ref. 81901) or locally by using push-buttons. ▪ 2 programmable functions (Up/Down). ▪ Function: "Standby".	45311 S eco	BR	1
Local Blinds Control Module with Infrared Remote Control ▪ Rated Voltage: 230V~ - 50Hz. ▪ Breaking Capacity: 6A. ▪ Remote control through an IR transmitter (Ref. 81901) or locally by using push-buttons.	45312 S eco	BR	1
Infrared Remote Control Transmitter for Blinds Control ▪ 4 groups of Buttons with 2 programmable functions. ▪ It works with 2 AAA batteries, not included.	81901	—	1

- **S** - Semi-assembled.
- **BR** - White.
- eco - The products identified with this symbol improve the saving of energy and contribute to the the energy efficiency of the building.

ELECTRONIC CONTROLS

	Ref.	Colour	Box (Un)
Motion Detector of 1000W ▪ Rated Voltage: 230V~ ± 10%; 50/60Hz. ▪ Sensibility Regulation. ▪ Range of Detection: 8 meters. ▪ Detection Angle: 160°. ▪ Inverter Contact (NO+NC), voltage free. ▪ Relay Output, compatible with all types of loads.	45401 S eco	BR	1
Motion Detector of 400W ▪ Rated Voltage: 230V~ ± 10%; 50/60Hz. ▪ Sensibility Regulation. ▪ Range of Detection: 8 meters. ▪ Detection Angle: 160°. ▪ Inverter Contact (NO+NC), voltage free. ▪ Relay Output, compatible with all types of loads.	45402 S eco	BR	1
One Circuit Digital Clock Switch ▪ Rated Voltage: 230V~ - 50Hz. ▪ Breaking Capacity: 6A. ▪ Output Type: ON, OFF and IMPULSE.	45046 S eco	BR	1
Two Circuits Digital Clock Switch ▪ Rated Voltage: 230V~ - 50Hz. ▪ Breaking Capacity: 6A + 6A. ▪ Output Type: ON, OFF and IMPULSE.	45047 S eco	BR	1
Programmable Chrono-Thermostat NEW ▪ Rated Voltage: 230V~ - 50Hz. ▪ Breaking Capacity: 16A. ▪ Inverter Contact (NO+NC), voltage free. ▪ Room Temperature Read-out from 0 to 35°C. ▪ It is possible to connect to a floor temperature sensor.	45232 S eco	BR	1
Room Thermostat with Infrared Remote Control NEW ▪ Rated Voltage: 230V~ - 50Hz. ▪ Breaking Capacity: 16A. ▪ Inverter Contact (NO+NC), voltage free. ▪ Room Temperature Read-out from 0 to 35°C. ▪ Remote control through an IR transmitter (Ref. 81902) or locally by using push-buttons. ▪ It is possible to connect to a floor temperature sensor.	45233 S eco	BR	1
Floor Temperature Sensor for Programmable Chrono-Thermostat and Room Thermostat with Infrared Remote Control NEW ▪ Length: 4m. ▪ Range: from 0 to 70°C. ▪ IP67	81950	—	1
Infrared Remote Control Transmitter for Room Thermostat ▪ It works with 2 AAA batteries, not included.	81902	—	1

POWER SUPPLIES

	Ref.	Colour	Box (Un)
Power Supply Module 15V⎓ 5W ▪ Input: 110/250V~ - 50Hz. ▪ Output: 15V⎓ - 12W. ▪ Capacity to supply 4 Stereo Sound Control Units or 8 Mono Sound Control Units.	45380 S	BR	1

▪ **S** - Semi-assembled.
▪ **BR** - White.
▪ eco - The products identified with this symbol improve the saving of energy and contribute to the the energy efficiency of the building.

MODULAR SOUND CENTRAL UNITS

	Ref.	Colour	Box (Un)
1 Stereo Channel Modular Sound Central Unit	**45391 S**	**BR**	**1**
1 Stereo Channel Modular Sound Central Unit with FM Tuner	**45392 S**	**BR**	**1**
3 Stereo Channel Auxiliary Input Module	**45393 S**	**BR**	**1**

SOUND CONTROL UNITS

	Ref.	Colour	Box (Un)
1 Stereo Channel Sound Control Unit with FM Tuner, Alarm Clock and Infrared Remote Control	45370 S	BR	1
1 Stereo Channel Sound Control Unit with FM Tuner and Alarm Clock	45379 S	BR	1
1 Stereo Channel Sound Control Unit with FM Tuner	45377 S	BR	1
1 Mono Channel Sound Control Unit with FM Tuner	45373 S	BR	1
4 Mono Channels Sound Control Unit with FM Tuner	45378 S	BR	1
1 Stereo Channel Sound Control Unit	45372 S	BR	1
1 Mono Channel Sound Control Unit	45371 S	BR	1
4 Mono Channels Sound Control Unit	45374 S	BR	1

- **S** - Semi-assembled.
- **BR** - White; **CZ** - Grey.

COMPLEMENTARY SOUND CONTROL UNITS

	Ref.	Colour	Box (Un)
4 Stereo Channels Selector Module ▪ To be installed with 1 Stereo Channel Sound Control Unit in installations with Modular Sound Central Units with 3 Stereo Channel Auxiliary Input Module.	45385 S	BR	1
Infrared Remote Control Transmitter for Soud System ▪ For FM Sound Control Unit - Ref. 21370. ▪ It works with 2 AAA batteries, not included.	75985	—	1

OTHER PRODUCTS

	Ref.	Colour	Box (Un)
Adapter for Q45 Modules to Electrical Panels	45990 A	BR	10
Blocking Pin for Q45 Series Sockets	45991	—	25
48 Series Box with Cover for QUADRO 45 Series ▪ Allows to adapt the QUADRO 45 functions to the WATERPROOF 48 Series (except Motion Detectors).	48998 C	CZ BR	4

FRONTAL ADAPTERS

	Ref.	Colour	Box (Un)
Single Adapter for Q45 Modules to Trunkings with Covers of 60/75mm width ▪ To be used in **10 Series** (Ref. 10080 and 10090) and **16 Series Cable-trunkings**.	10986 A	BR	20
Double Adapter for Q45 Modules to Trunkings with Covers of 60mm width	10951 A	BR	10
Double Adapter for Q45 Modules to Trunkings with Covers of 75mm width	10952 A	BR	10
Triple Adapter for Q45 Modules to Trunkings with Covers of 60mm width	10953 A	BR	10
Triple Adapter for Q45 Modules to Trunkings with Covers of 75mm width	10954 A	BR	10

- **S** - Semi-assembled; **A** - Accessory; **C** - Complete Product.
- **BR** - White; **CZ** - Grey.
- See the Selection Table for Frontal Adapters on page 102.

FRONTAL ADAPTERS

	Ref.	Colour	Box (Un)
Frontal Adapter for Q45 Modules to **60x16** Trunking	10988 A	BR	10
Frontal Adapter for Q45 Modules to **75x20** Trunking	10989 A	BR	10

LATERAL ADAPTERS

	Ref.	Colour	Box (Un)
Lateral Adapter for Q45 Modules to **12x7** Trunking	10961 A	BR	10
Lateral Adapter for Q45 Modules to **16x10** Trunking	10962 A	BR	10
Lateral Adapter for Q45 Modules to **20x12,5** Trunking	10963 A	BR	10
Lateral Adapter for Q45 Modules to **32x16** Trunking	10964 A	BR	10
Lateral Adapter for Q45 Modules to **40x12,5** Trunking	10965 A	BR	10
Lateral Adapter for Q45 Modules to **40x16** Trunking	10966 A	BR	10
Lateral Adapter for Q45 Modules to **60x16** Trunking	10967 A	BR	10
Lateral Adapter for Q45 Modules to **75x20** Trunking	10968 A	BR	10

- **A** - Accessory.
- **BR** - White.
- See the Selection Table for Lateral Adapters on pages 102 and 103.

FRONTAL ADAPTERS FOR 10 AND 16 SERIES CABLE-TRUNKINGS - Selection Table

FRONTAL ADAPTERS

Selection Table

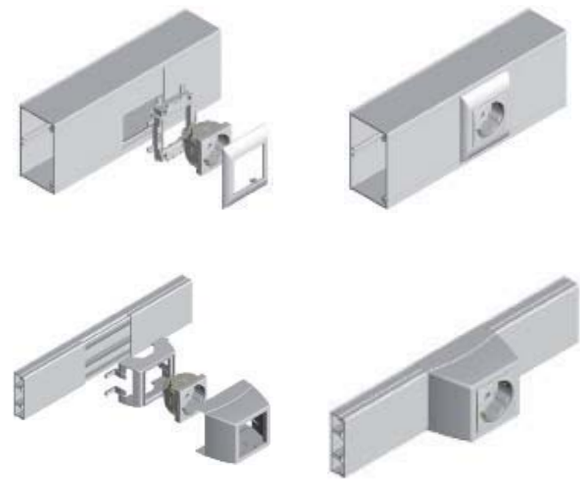

Trunkings		**SINGLE** Adapter
10080 CBR	**110x34** Trunking	10986 ABR
10090 CBR	**110x50** Trunking	
16010 CBR	**75x50** Modular Trunking	
16020 CBR	**90x50** Modular Trunking	
16030 CBR	**155x50** Modular Trunking	
16040 CBR	**185x50** Modular Trunking	
16050 CBR	**90x65** Modular Trunking	
16060 CBR	**185x65** Modular Trunking	
10070 CBR	**60x16** Trunking	10988 ABR
10170 CBR	**60x16** Trunking without Dividers	
10140 CBR	**75x20** Trunking	10989 ABR

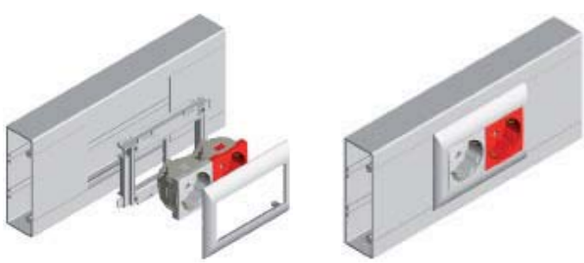

Trunkings		**DOUBLE** Adapter
16010 CBR	**75x50** Modular Trunking	10951 ABR
16030 CBR	**155x50** Modular Trunking	
10080 CBR	**110x34** Trunking	10952 ABR
10090 CBR	**110x50** Trunking	
16020 CBR	**90x50** Modular Trunking	
16040 CBR	**185x50** Modular Trunking	
16050 CBR	**90x65** Modular Trunking	
16060 CBR	**185x65** Modular Trunking	

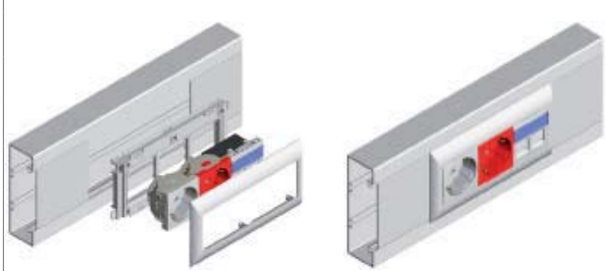

Trunkings		**TRIPLE** Adapter
16010 CBR	**75x50** Modular Trunking	10953 ABR
16030 CBR	**155x50** Modular Trunking	
10080 CBR	**110x34** Trunking	10954 ABR
10090 CBR	**110x50** Trunking	
16020 CBR	**90x50** Modular Trunking	
16040 CBR	**185x50** Modular Trunking	
16050 CBR	**90x65** Modular Trunking	
16060 CBR	**185x65** Modular Trunking	

- **A** - Accessory.
- **BR** - White.
- **CBR** - White Complete Product.

LATERAL ADAPTERS TO 10 SERIES CABLE-TRUNKINGS - Selection Table

LATERAL ADAPTERS

Selection Table

Trunkings Adhesive Trunking		Adapter
10010 CBR	**12x7** Trunking	10961 ABR
10010 FBR	12x7 Adhesive Trunking	
10020 CBR	**16x10** Trunking	10962 ABR
10020 FBR	16x10 Adhesive Trunking	
10030 CBR	**20x12,5** Trunking	10963 ABR
10030 FBR	20x12,5 Adhesive Trunking	
10040 CBR	**32x16** Trunking	10964 ABR
10040 FBR	32x16 Adhesive Trunking	
10050 CBR	**40x12,5** Trunking	10965 ABR
10050 FBR	40x12,5 Adhesive Trunking	
10150 CBR	**40x12,5** Trunking without divider	
10150 FBR	40x12,5 Adhesive Trunking without Divider	
10060 CBR	**40x16** Trunking	10966 ABR
10060 FBR	40x16 Adhesive Trunking	
10160 CBR	**40x16** Trunking without Divider	
10160 FBR	40x16 Adhesive Trunking without Divider	
10070 CBR	**60x16** Trunking	10967 ABR
10170 CBR	**60x16** Trunking without Dividers	
10140 CBR	**75x20** Trunking	10968 ABR

- **A** - Accessory.
- **BR** - White.
- **CBR** - White Complete Product; **FBR** - White Complete Product with Adhesive Tape.

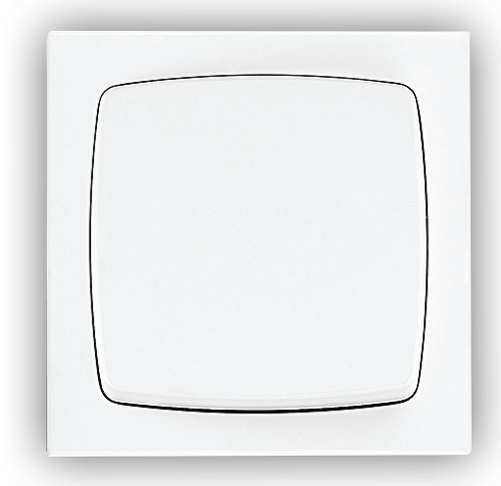

Single Pole Switch
BR - White

The **47 Series** was designed to be used in **surface mounting electrical installations** together with **the system of Cable-trunkings of the 10 Series**.

It is a harmonic solution to surface installations in a wide variety of places like houses, offices, schools, laboratories, vans. workshops, etc..

The **47 Series** has a set of accessories designed to be **mounted in horizontal and vertical beside or over the cable-trunkings** of the 10 Series.

It is produced in **White** colour (RAL 9003) and it has a complete set of 36 basic functions.

CONTROL DEVICES (Semi-assembled with Frame and Rocker)

	Ref.	Colour	Box (Un)
Single Pole Switch 10AX - 250V~	47011 S	BR	10
Single Pole Switch with Orienting Light 10AX - 250V~ ▪ To control electronic energy-saving lamps, we recommend the use of capacitors of 0,15µF 275V~ connected in parallel to the load to avoid the blinking in the lamp when the contact is open.	47012 S	BR	10
Single Pole Switch with Pilot Lamp 10AX - 250V~	47013 S	BR	10
Two Circuits Switch 10AX - 250V~	47061 S	BR	10
Two-way Switch 10AX - 250V~	47071 S	BR	10
Two-way Switch with Orienting Light 10AX - 250V~ ▪ To control electronic energy-saving lamps, we recommend the use of capacitors of 0,15µF 275V~ connected in parallel to the load to avoid the blinking in the lamp when the contact is open.	47072 S	BR	10
Two-way Switch with Pilot Lamp 10AX - 250V~	47073 S	BR	10
Double Two-way Switch 10AX - 250V~	47101 S	BR	10

▪ **S** - Semi-assembled.
▪ **BR** - White.

CONTROL DEVICES (Semi-assembled with Frame and Rocker)

	Ref.	Colour	Box (Un)
Intermediate Switch 10A - 250V~	47051 S	BR	10
Intermediate Switch with Orienting Light 10AX - 250V~ ▪ To control electronic energy-saving lamps, we recommend the use of capacitors of 0,15µF 275V~ connected in parallel to the load to avoid the blinking in the lamp when the contact is open.	47052 S	BR	10
Rocker Push-button 10A - 250V~	47151 S	BR	10
Rocker Push-button Switch with Orienting Light (250V) 10AX - 250V~	47152 S	BR	10
Rocker Push-button Switch with Identification (250V) 10AX - 250V~	47155 S	BR	10
Venetian Switch 10A - 250V~ ▪ Switch function. ▪ Electrical and Mechanical Blockade against the appearance of two simultaneous orders. ▪ Toggles automatically one rocker when the other is pressed.	47290 S	BR	10
Venetian Double Push-button 10A - 250V~ ▪ Push-button function. ▪ Electrical and Mechanical Blockade against the appearance of two simultaneous orders.	47281 S	BR	10

▪ **S** - Semi-assembled.
▪ **BR** - White.

DATA SOCKETS (Semi-assembled with Frame)

	Ref.	Colour	Box (Un)
Single RJ45 Cat. 6 UTP Computer Socket	47455 S	BR	1
Single RJ45 Cat. 6 STP Computer Socket	47445 S	BR	1
Single RJ45 Cat. 5e UTP Computer Socket	47453 S	BR	1
Single RJ45 Cat. 5e STP Computer Socket	47443 S	BR	1

TELEPHONE SOCKETS (Semi-assembled with Frame)

	Ref.	Colour	Box (Un)
50V ⎓ 70V~			
Telephone Socket (RITA)	47251 S	BR	10
Telephone Socket (4 Conductors)	47252 S	BR	10
Telephone Socket (6 Conductors)	47253 S	BR	10
8 contacts			
T8 French Telephone Socket	47411 S	BR	10

- **S** - Semi-assembled.
- **BR** - White.

RADIO, TELEVISION AND SATELLITE SOCKETS (Semi-assembled with Frame)

	Ref.	Colour	Box (Un)
Radio and Television Sockets			
Equalized R - TV Socket for Star Connection (Terminal type) ▪ Coaxial Connector ø 9,5; ▪ 4 - 862 MHz; ▪ Insertion Losses: ≤ 0,5dB.	47531 S	BR	10
Equalized R - TV Socket for Series Connection (Crossover type) ▪ Coaxial Connector ø 9,5; ▪ 4 - 862 MHz; ▪ Insertion Losses: ≤ 6dB; ▪ Flow ≤ 2dB.	47532 S	BR	10
Radio, Television and Satellite Sockets			
R TV - SAT Socket for Star Connection ▪ Coaxial Connector ø 9,5; ▪ 4 - 470 MHz; ▪ Insertion Losses: ≤ 1dB; ▪ 470 - 822 MHz; ▪ Insertion Losses: ≤ 2dB; ▪ 822 - 862 MHz; ▪ Insertion Losses: ≤ 6dB; ▪ Current Flow: 500mA.	47550 S	BR	10
Coaxial F Computer Socket	47431 S	BR	1

▪ **S** - Semi-assembled.
▪ **BR** - White.

ENERGY SOCKETS (Semi-assembled with Cover)

	Ref.	Colour	Box (Un)
Safety Earth Socket (Schuko Type) 16A - 250V~	47132 S	BR LR VM	10
Earth Socket (Schuko Type) 16A - 250V~	47131 S	BR LR VM	10
Safety Single Phase Socket 16A - 250V~	47122 S	BR	10
Single Phase Socket 16A - 250V~	47121 S	BR	10
Safety Earth Socket (French Type) 16A - 250V~	47112 S	BR	10

OTHER PRODUCTS (Semi-assembled with Cover)

	Ref.	Colour	Box (Un)
Wall Rose ▪ Without Connectors.	47170 S	BR	10
Junction Box ▪ 4xx2,5mm^2.	47201 S	BR	10
Pilot Light ▪ Max. 5W / 250V~ (E14). ▪ To be used with Lamp Ref. 81012 (page 158).	(47360 S	BI BJ BV BM	2
Stereo Music Socket ▪ Connector DIN 41529.	47221 S	BR	10

▪ **S** - Semi-assembled.
▪ **BR** - White; **LR** - Orange; **VM** - Red; **BI** - White/Colourless; **BJ** - White/Orange; **BV** - White/Green; **BM** - White/Red.

ACCESSORY FOR SURFACE MOUNTING

	Ref.	Colour	Box (Un)
Flush Mounting Box 60x60mm	47993 A	BR	10

ADAPTERS FOR 10 SERIES TRUNKINGS

	Ref.	Colour	Box (Un)
For Lateral Mounting			
47 Series Lateral Adapter for **12x7** Trunking	10018 A	BR	10
47 Series Lateral Adapter for **16x10** Trunking	10028 A	BR	10
47 Series Lateral Adapter for **20x12,5** Trunking	10038 A	BR	10
47 Series Lateral Adapter for **32x16** Trunking	10048 A	BR	10
47 Series Lateral Adapter for **40x12,5** Trunking	10058 A	BR	10
47 Series Lateral Adapter for **40x16** Trunking	10068 A	BR	10
47 Series Lateral Adapter for **60x16** Trunking	10078 A	BR	10
47 Series Lateral Adapter for **75x20** Trunking	10148 A	BR	10
For Frontal Mounting			
47 Series Frontal Adapter for **60x16** Trunking	10079 A	BR	10
47 Series Frontal Adapter for **75x20** Trunking	10149 A	BR	10

- **A** - Accessory.
- **BR** - White.
- See **10 Series** - Cable-trunkings for Electrical and Telecomunications Installations - Miniature Cable-trunkings (from page 114 to 117).

Cable-Trunkings

10 Series

Cable-trunkings for Electrical and Telecommunications Installations (page 114 - 125)

110x50 Trunking
BR - White

The **10 Series** is composed by 4 types of Cable-trunkings:

- Miniature Cable-trunkings (page 114);
- Skirt Cable-trunkings (page 118);
- Floor Cable-trunkings (page 118);
- Distribution Cable-trunkings (page 122).

All these Cable-trunkings have a set of accessories which are specially prepared for the installation of products of the LOGUS 90, Sirius 70, APOLO 5000, 3700, 47 and QUADRO 45 Series.

16 Series

Distribution Modular Cable-trunkings (page 126 - 129)

185x50 Modular Trunking
BR - White

By using the Adapter Clip, the **16 Series** allows the successive and gradual expansion of installations by keeping the continuity and the external finishing.

This Series is specially prepared for the installation of products of the LOGUS 90, Sirius 70, APOLO 5000 and QUADRO 45 Series.

It is produced in **White** colour (RAL 9003) and comes in **6 sizes**.

13 Series

Trunkings for the Protection of Cables and Pipes (page 130 - 131)

80x40 Trunking
BR - White

The **13 Series** is the robust and reliable solution to get a **versatile system of conduits** for the **installation and protection of cables, pipes of air-conditioning, water, compressed-air, vacuum and heating.**

This Series is produced in **White** colour (RAL 9003) and comes with **8 sizes**.

14 Series

Trunkings for Electrical Panels (page 132 - 133)

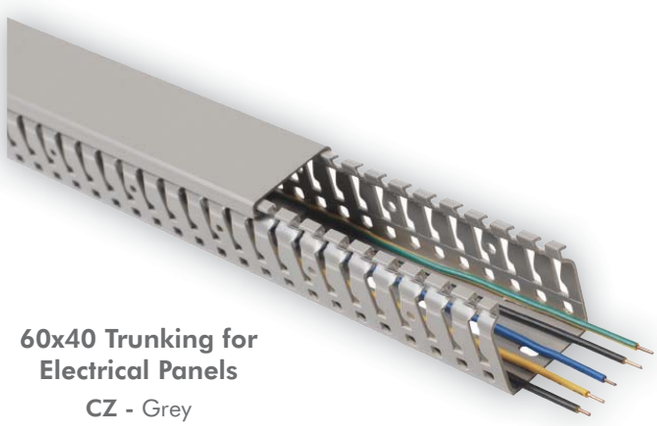

60x40 Trunking for Electrical Panels
CZ - Grey

Easy to install due to **its perforated base**, the **14 Series** allows gradual expansion of the number of wires and their secure fixation.

The main applications are:

- Networking and Structured Cabling;
- Electrical Panels;
- Panels of Automation Systems for Machines.

This Series is produced in **Grey** colour (RAL 7035) and comes in **8 sizes**.

MINIATURE CABLE-TRUNKINGS

EN 50085-2-1 Standard

IP44 RoHS IK07

Trunkings Adhesive Trunkings				Accessories			
Designation	Ref.		L x H (m / box)	Derivation	Inside Angle	Plane Angle	Joint
12x7 Trunking (IK05) 12x7 Adhesive Trunking (IK05)	10010 CBR 10010 FBR		12x7 (120m)	10011 ABR (20 un)	10012 ABR (20 un)	10013 ABR (20 un)	10014 ABR (20 un)
16x10 Trunking 16x10 Adhesive Trunking	10020 CBR 10020 FBR		16x10 (120m)	10021 ABR (20 un)	10022 ABR (20 un)	10023 ABR (20 un)	10024 ABR (20 un)
20x12,5 Trunking 20x12,5 Adhesive Trunking	10030 CBR 10030 FBR		20x12,5 (120m)	10031 ABR (20 un)	10032 ABR (20 un)	10033 ABR (20 un)	10034 BR (20 un)
32x16 Trunking 32x16 Adhesive Trunking	10040 CBR 10040 FBR		32x16 (60m)	10041 ABR (20 un)	10042 ABR (20 un)	10043 ABR (20 un)	10044 ABR (20 un)
40x12,5 Trunking 40x12,5 Adhesive Trunking	10050 CBR 10050 FBR		40x12,5 (60m)	10051 ABR (20 un)	10052 ABR (20 un)	10053 ABR (20 un)	10054 ABR (20 un)
40x12,5 Trunking without Divider 40x12,5 Adhesive Trunking without Divider	10150 CBR 10150 FBR						
40x16 Trunking 40x16 Adhesive Trunking	10060 CBR 10060 FBR		40x16 (50m)	10061 ABR (10 un)	10062 ABR (10 un)	10063 ABR (10 un)	10064 ABR (10 un)
40x16 Trunking without Divider 40x16 Adhesive Trunking without Divider	10160 CBR 10160 FBR						
60x16 Trunking	10070 CBR		60x16 (50m)	10071 ABR (10 un)	10072 ABR (10 un)	10073 ABR (10 un)	10074 ABR (10 un)
60x16 Trunking without Dividers	10170 CBR						
75x20 Trunking	10140 CBR		75x20 (32m)	10141 ABR (10 un)	10142 ABR (10 un)	10143 ABR (10 un)	10144 ABR (10 un)

▪ **CBR** - White Complete Product; **FBR** - White Complete Product with Adhesive Tape; **ABR** - White Accessory.

White Colour (RAL 9003)

	Top	Outside Angle	Derivation Cat. 6	Inside Angle Cat. 6	Plane Angle Cat. 6	Outside Angle Cat. 6	Reduction 75x20 Trunking to 40x12,5 Trunking of Cat. 6	Junction Box 80x80x20	Junction Box 80x80x30	Junction Box 110x110x50
	10015 ABR (20 un)	10016 ABR (20 un)	—	—	—	—	—	10991 ABR (10 un)	10998 ABR (10 un)	10993 ABR (10 un)
	10025 ABR (20 un)	10026 ABR (20 un)	—	—	—	—	—	10991 ABR (10 un)	10998 ABR (10 un)	10993 ABR (10 un)
	10035 ABR (20 un)	10036 ABR (20 un)	—	—	—	—	—	10991 ABR (10 un)	10998 ABR (10 un)	10993 ABR (10 un)
	10045 ABR (20 un)	10046 ABR (20 un)	—	—	—	—	—	10991 ABR (10 un)	10998 ABR (10 un)	10993 ABR (10 un)
	10055 ABR (20 un)	10056 ABR (20 un)	10051 DBR (20 un)	10052 DBR (20 un)	10053 DBR (20 un)	10056 DBR (20 un)	10977 DBR (20 un)	10991 ABR (10 un)	10998 ABR (10 un)	10993 ABR (10 un)
	10065 ABR (10 un)	10066 ABR (10 un)	—	—	—	—	—	10991 ABR (10 un)	10998 ABR (10 un)	10993 ABR (10 un)
	10075 ABR (10 un)	10076 ABR (10 un)	—	—	—	—	—	10991 ABR (10 un)	10998 ABR (10 un)	10993 ABR (10 un)
	10145 ABR (10 un)	10146 ABR (10 un)	10141 DBR (10 un)	10142 DBR (10 un)	10143 DBR (10 un)	10146 DBR (10 un)	10977 DBR (10 un)	—	—	10993 ABR (10 un)

▪ **ABR** - White Accessory; **DBR** - White Data Accessory Cat. 6.

MINIATURE CABLE-TRUNKINGS (Continuation)

EN 50085-2-1 Standard

IP44 IK07 RoHS

Trunkings
Adhesive Trunkings

Designation	Ref.		L x H (m / box)	Accessories: 3700 Series Adapter	47 Series Lateral Adapter	47 Series Frontal Adapter
12x7 Trunking (IK05) 12x7 Adhesive Trunking (IK05)	10010 CBR 10010 FBR		12x7 (120m)	10017 ABR (20 un)	10018 ABR (10 un)	—
16x10 Trunking 16x10 Adhesive Trunking	10020 CBR 10020 FBR		16x10 (120m)	10027 ABR (20 un)	10028 ABR (10 un)	—
20x12,5 Trunking 20x12,5 Adhesive Trunking	10030 CBR 10030 FBR		20x12,5 (120m)	10037 ABR (20 un)	10038 ABR (10 un)	—
32x16 Trunking 32x16 Adhesive Trunking	10040 CBR 10040 FBR	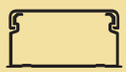	32x16 (60m)	10047 ABR (20 un)	10048 ABR (10 un)	—
40x12,5 Trunking 40x12,5 Adhesive Trunking	10050 CBR 10050 FBR		40x12,5 (60m)	10057 ABR (20 un)	10058 ABR (10 un)	—
40x12,5 Trunking without Divider 40x12,5 Adhesive Trunking without Divider	10150 CBR 10150 FBR					
40x16 Trunking 40x16 Adhesive Trunking	10060 CBR 10060 FBR		40x16 (50m)	10067 ABR (10 un)	10068 ABR (10 un)	—
40x16 Trunking without Divider 40x16 Adhesive Trunking without Divider	10160 CBR 10160 FBR					
60x16 Trunking	10070 CBR		60x16 (50m)	10077 ABR (10 un)	10078 ABR (10 un)	10079 ABR (10 un)
60x16 Trunking without Dividers	10170 CBR					—
75x20 Trunking	10140 CBR		75x20 (32m)	10147 ABR (10 un)	10148 ABR (10 un)	10149 ABR (10 un)

- **CBR** - White Complete Product; **FBR** - White Complete Product with Adhesive Tape; **ABR** - White Accessory.

White Colour (RAL 9003)

	Q45 Series Frontal Adapter	Q45 Series Lateral Adapter	LOGUS 90 Series Surface Mounting Box	Sirius 70 Series Surface Mounting Box	APOLO 5000 Series Surface Mounting Box	Surface Mounting Box for Italian/American Type Mechanisms
					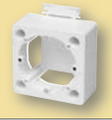	
	—	10961 ABR (10 un)	10976 ABR 10976 AMF (10 un)	10975 ABR 10975 AMF (10 un)	10981 ABR 10981 AMF (10 un)	10972 ABR (5 un)
	—	10962 ABR (10 un)	10976 ABR 10976 AMF (10 un)	10975 ABR 10975 AMF (10 un)	10981 ABR 10981 AMF (10 un)	10972 ABR (5 un)
	—	10963 ABR (10 un)	10976 ABR 10976 AMF (10 un)	10975 ABR 10975 AMF (10 un)	10981 ABR 10981 AMF (10 un)	10972 ABR (5 un)
	—	10964 ABR (10 un)	10976 ABR 10976 AMF (10 un)	10975 ABR 10975 AMF (10 un)	10981 ABR 10981 AMF (10 un)	10972 ABR (5 un)
	—	10965 ABR (10 un)	10976 ABR 10976 AMF (10 un)	10975 ABR 10975 AMF (10 un)	10981 ABR 10981 AMF (10 un)	10972 ABR (5 un)
	—	10966 ABR (10 un)	10976 ABR 10976 AMF (10 un)	10975 ABR 10975 AMF (10 un)	10981 ABR 10981 AMF (10 un)	10972 ABR (5 un)
	10988 ABR (10 un) —	10967 ABR (10 un)	10976 ABR 10976 AMF (10 un)	10975 ABR 10975 AMF (10 un)	10981 ABR 10981 AMF (10 un)	10972 ABR (5 un)
	10989 ABR (10 un)	10968 ABR (10 un)	10976 ABR 10976 AMF (10 un)	10975 ABR 10975 AM (10 un)	10981 ABR 10981 AMF (10 un)	10972 ABR (5 un)

▪ **ABR** - White Accessory; **AMF** - Ivory Accessory.

SKIRT CABLE-TRUNKINGS

EN 50085-2-1 Standard

IP44

RoHS

Trunkings				Accessories			
Designation	Ref.		L x H (m / box)	Derivation	Variable Inside Angle	Joint	
110x20 Skirt Trunking (IK05)	10100 CBR		110x20 (20m)	10101 ABR (4 un)	10102 ABR (4 un)	10104 ABR (4 un)	

Note: Trunkings supplied with Protection Film.

FLOOR CABLE-TRUNKINGS

EN 50085-2-1 Standard

RoHS

Trunkings				Accessories			
Designation	Ref.		L x H (m / box)	Plane Angle	Joint	Top / Adapter	
50x12 Floor Trunking	10110 CCZ		50x12 (20m)	10113 ACZ (10 un)	10114 ACZ (10 un)	10115 ACZ (10 un)	
75x17 Floor Trunking	10120 CCZ		75x17 (20m)	10123 ACZ (10 un)	10124 ACZ (10 un)	10125 ACZ (10 un)	

Note: Trunkings supplied with Protection Film.

▪ **CBR** - White Complete Product; **ABR** - White Accessory; **CCZ** - Grey Complete Product; **ACZ** - Grey Accessory.

White Colour (RAL 9003)

	Left Top	Right Top	Variable Outside Angle	Adapter	Clip for Cable Support	LOGUS 90 Series Surface Mounting Box	Sirius 70 Series Surface Mounting Box	APOLO 5000 Series Surface Mounting Box	Surface Mounting Box for Italian/American Type Mechanisms
	10105 ABR (4 un)	10108 ABR (4 un)	10106 ABR (4 un)	10107 ABR (4 un)	10109 ABR (50 un)	10976 ABR 10976 AMF (10 un)	10975 ABR 10975 AMF (10 un)	10981 ABR 10981 AMF (10 un)	10972 ABR (5 un)

Grey Colour (RAL 7035)

	Adapter for 50x12 Floor Trunking to 40x12,5 Trunking	Adapter for 75x17 Floor Trunking to 60x16 Trunking	Surface Mounting Box APOLO 5000 for Floor Trunkings	Junction Box for Floor Trunkings
	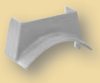	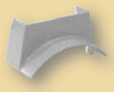		
	10117 ACZ (10 un)	—	10997 ACZ (10 un)	10999 ACZ (10 un)
	—	10127 ACZ (10 un)	10997 ACZ (10 un)	10999 ACZ (10 un)

▪ **ABR** - White Accessory; **AMF** - Ivory Accessory; **ACZ** - Grey Accessory.

MINIATURE CABLE-TRUNKINGS - Selection Guide

IP44 RoHS IK07

Designation	Ref.	Trunkings Characteristics				Isolated Cables Capacity				
		Internal Dim.	Length	Internal Section (S)	Available Section (Su)	Max. ø Available	Max. Nr. Conductors H07 V-U			
		(mm)	(m)	(mm²)	(S:1.4) (mm²)	(mm)	1.5mm²	2.5mm²	4mm²	6mm²
12x7 Trunking (IK05)	10010 CBR	10x5	2,10 **(a)**	61,2	44	5	5	4	3	2
12x7 Adhesive Trunking (IK05)	10010 FBR									
16x10 Trunking	10020 CBR	14x8	2,10 **(a)**	121	86	8	11	7	6	4
16x10 Adhesive Trunking	10020 FBR									
20x12,5 Trunking	10030 CBR	18x10	2,10 **(a)**	182,1	130	10	16	11	9	6
20x12,5 Adhesive Trunking	10030 FBR									
32x16 Trunking	10040 CBR	30x14	2,10 **(a)**	401	286	14	36	25	20	15
32x16 Adhesive Trunking	10040 FBR									
40x12,5 Trunking	10050 CBR	38x9	2,10 **(a)**	1 179 2 179	128 128	9 9	16 16	11 11	9 9	6 6
40x12,5 Adhesive Trunking	10050 FBR									
40x12,5 Trunking without Divider	10150 CBR			394,8	282	9	36	24	19	14
40x12,5 Adhesive Trunking without Divider	10150 FBR									
40x16 Trunking	10060 CBR	38x14	2,10 **(a)**	1 232 2 232	166 166	14 14	21 21	14 14	11 11	8 8
40x16 Adhesive Trunking	10060 FBR									
40x16 Trunking without Divider	10160 CBR			514,7	368	14	47	32	25	19
40x16 Adhesive Trunking without Divider	10160 FBR									
60x16 Trunking	10070 CBR	57x14	2,10 **(a)**	1 228 2 246 3 228	163 176 163	14 14 14	20 22 20	14 15 14	11 12 11	8 9 8
60x16 Trunking without Dividers	10170 CBR			787,9	563	14	72	48	39	29
75x20 Trunking	10140 CBR	72x18	2,10 **(a)**	1 325 2 463 3 325	232 331 232	17 17 17	29 42 29	20 28 20	16 23 16	12 17 12

- **CBR** - White Complete Product; **FBR** - White Complete Product with Adhesive Tape.
- **(a)** - Invoiced in units of 2 meters.

SKIRT CABLE-TRUNKINGS - Selection Guide

IP44

RoHS

Designation	Ref.		Trunkings Characteristics				Isolated Cables Capacity				
			Internal Dim.	Length	Internal Section (S)	Available Section (Su)	Max. ø Available	Max. Nr. Conductors H07 V-U			
			(mm)	(m)	(mm²)	(S:1.4) (mm²)	(mm)	1.5mm²	2.5mm²	4mm²	6mm²
110x20 Skirt Trunking (IK05)	10100 CBR		104x17	2,00	1 330,7 2 420,7 3 436,9	236 301 312	14 16 17	30 38 40	20 26 27	16 21 21	12 15 16

FLOOR CABLE-TRUNKINGS - Selection Guide

RoHS

Designation	Ref.		Trunkings Characteristics				Isolated Cables Capacity				
			Internal Dim.	Length	Internal Section (S)	Available Section (Su)	Max. ø Available	Max. Nr. Conductors H07 V-U			
			(mm)	(m)	(mm²)	(S:1.4) (mm²)	(mm)	1.5mm²	2.5mm²	4mm²	6mm²
50x12 Floor Trunking	10110 CCZ		30x9	2,00	1 47 2 148 3 47	34 106 34	6 9 6	4 13 4	3 9 3	2 7 2	1 5 1
75x17 Floor Trunking	10120 CCZ		60x14	2,00	1 198,8 2 238,5 3 198,8	142 170 142	11 14 11	18 21 18	12 14 12	10 11 10	7 8 7

▪ **CBR** - White Complete Product; **CCZ** - Grey Complete Product.

DISTRIBUTION CABLE-TRUNKINGS

EN 50085-2-1 Standard

Trunkings with Covers of 75mm (L75) Width

IP44 RoHS IK08

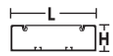

Accessories

Designation	Ref.		L x H (m / box)	Derivation	Variable Inside Angle	Plane Angle	Joint	Top
110x34 Trunking - Cover - L75	10080 CBR	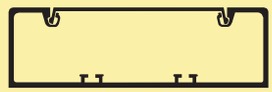	110x34 (20m)	10081 ABR (4 un)	10082 ABR (4 un)	10083 ABR (4 un)	10084 ABR (4 un)	10085 ABR (4 un)
110x50 Trunking - Cover - L75	10090 CBR		110x50 (20m)	10091 ABR (4 un)	10092 ABR (4 un)	10093 ABR (4 un)	10094 ABR (4 un)	10095 ABR (4 un)

Note: Trunkings supplied with Protection Film.

MOUNTING INSTRUCTIONS

1. Fix the trunking to the wall (2 screws on both ends). In the case of installation of energy cables, these will have to be placed at a height greater than 15mm from the ground.

2. Place the Flush Mounting Box Ref. 10984 ABR **(a)**, Semi-Flush Mounting Box Ref. 10985 ABR **(b)** or Single Adapter for Modules of Q45 Series Trunkings with Covers of L60/75mm width Ref. 10986 ABR **(c)**.

   (a): LOGUS 90, Sirius 70 and APOLO 5000 Series
   (b): LOGUS 90, Sirius 70 and APOLO 5000 Series
   (c): QUADRO 45 Series

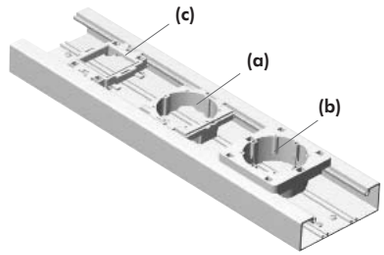

3. Make the connections and fix the mechanisms in the respective boxes.

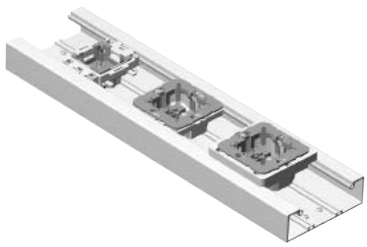

4. Apply the trunking cover, back plates and cover plates/ rockers. As regards the installation of telephone sockets, their lowest height should be 8mm from the ground at least.

▪ **CBR** - White Complete Product; **ABR** - White Accessory.

White Colour (RAL 9003)

	Variable Outside Angle	Derivation with Reduction	Divider	Flush Mounting Box	Semi-Flush Mounting Box	Flush Mounting Box for Italian/American Type Mechanisms	Clip for Cable Support	Single Adapter for Modules of Q45 Series Trunkings with Covers of 60/75mm width	Double Adapter for Modules of Q45 Series Trunkings with Covers of 75mm width	Triple Adapter for Modules of Q45 Series Trunkings with Covers of 75mm width
					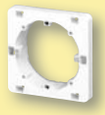					
	10086 ABR (4 un)	10088 ABR (4 un)	10089 (20 m)	10984 ABR (10 un)	10985 ABR (10 un)	10971 ABR (10 un)	10987 ABR (50 un)	10986 ABR (20 un)	10952 ABR (10 un)	10954 ABR (10 un)
	10096 ABR (4 un)	10098 ABR (4 un)	10099 (20 m)	10984 ABR (10 un)	10985 ABR (10 un)	10971 ABR (10 un)	10987 ABR (50 un)	10986 ABR (20 un)	10952 ABR (10 un)	10954 ABR (10 un)

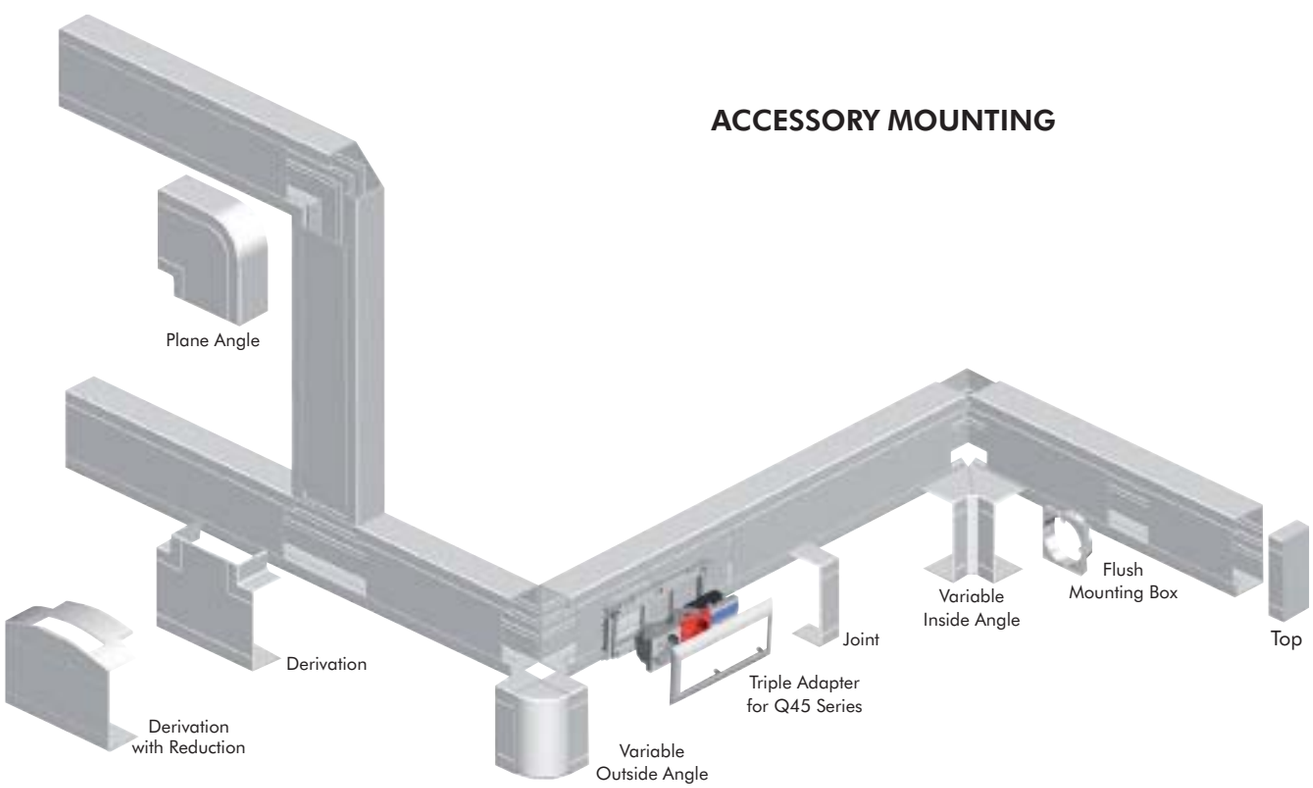

DISTRIBUTION CABLE-TRUNKINGS - Selection Guide

Trunkings with Covers of 75mm (L75) Width

IP44 RoHS IK08

Designation	Ref.		Trunkings Characteristics				Isolated Cables Capacity				
			Internal Dim.	Length	Internal Section (S)	Available Section (Su)	Max. ø Available	Max. Nr. Conductors H07 V-U			
			(mm)	(m)	(mm²)	(S:1.4) (mm²)	(mm)	1.5mm²	2.5mm²	4mm²	6mm²
110x34 Trunking without Divider	10080 CBR (Cover - L75)	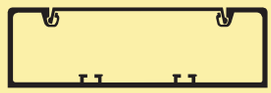	106x30	2,00	3111,2	2222	28	283	192	154	115
110x34 Trunking with 2 Dividers			—	—	1 896 2 1148 3 896	640 820 640	24 27 24	81 104 81	55 71 55	44 57 44	33 42 33
110x34 Trunking with Flush Mounting Box			—	—	1311,2 (b)	937	—	119	81	65	48
110x34 Trunking with Semi-Flush Mounting Box		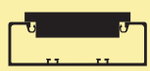	—	—	1888,2 (b)	1349	—	172	116	93	69
110x50 Trunking without Divider	10090 CBR (Cover - L75)	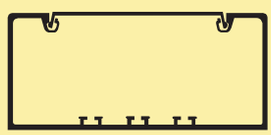	106x46	2,00	4766,4	3405	43	434	294	235	176
110x50 Trunking with 1 Divider		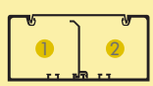	—	—	1 2348 2 2310	1677 1650	41 41	214 210	145 142	116 114	86 85
110x50 Trunking with 2 Dividers		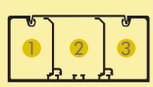	—	—	1 1391 2 1765 3 1391	994 1261 994	31 38 31	126 161 126	86 109 86	69 87 69	51 65 51
110x50 Trunking with Flush Mounting Box			—	—	2966,4 (b)	2119	—	270	183	146	109
110x50 Trunking with Semi-Flush Mounting Box		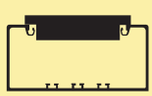	—	—	3543,4 (b)	2531	—	322	219	175	130

- **CBR** - White Complete Product.
- **(b)** - Section available with the biggest device.

CLASSIFICATION OF CABLE-TRUNKINGS OF 10 SERIES (EN 50085-2-1 Standard) - Section 6

Section 6	Classification	Miniature and Floor Cable-trunkings		Distribution Cable-trunkings
6.2	Resistance to the impact during the installation and application	12x7	**0,5 J**	**2 J**
		110x20	**1 J**	
		16x10 / 20x12,5 / 32x16 / 40x12,5 / 40x16 / 60x16 / 75x20	**2 J**	
6.3	Minimum Storage and Transport Temperature	-25°C		-25°C
6.3	Minimum Installation and Application Temperature	-5°C		-5°C
6.3	Maximum Installation Temperature	60°C		60°C
6.4	Resistance to flame propagation	Non-flame propagating		Non-flame propagating
6.5	Electrical continuity characteristic	Without Electrical continuity		Without Electrical continuity
6.6	Electrical Insulation	With electrical insulating		With electrical insulating
6.7	Protection degree provided by enclosure	**IP44**		**IP44**
6.8	Protection against corrosive or polluting substances	Medium protection outside and inside		Medium protection outside and inside
6.9	Access system and retention of the cover	The cover can only be opened with a tool		The cover can only be opened with a tool
6.10	Electrically protective separation	With and without internal protective partition (divider)		With internal protective partition (divider)
6.101	Intended installation positions	Surface mounted on wall and/or on the ceilling		Surface mounted on wall and/or on the ceilling
6.102	Prevention of contact between liquids and insulated conductors and live parts in case of mounted in a skirting position and on wet-treatment of floor	Not declared		Not declared
6.103	Type	Type 3 (Installation)		Type 3 (Installation)
	Rated Voltage	500V		500V

16 Series - Distribution Modular Cable-trunkings

EN 50085-2-1 Standard

Trunkings with Covers of 60mm (L60) and 75mm (L75) Width

IP44 RoHS IK08

Designation	Ref.		L x H (m / box)	Accesories: Derivation	Inside Angle	Plane Angle	Joint	Top	Outside Angle
75x50 Modular Trunking - Cover - L60	16010 CBR	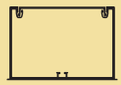	75x50 (16m)	16011 ABR (5 un)	16012 ABR (5 un)	16013 ABR (5 un)	16014 ABR (5 un)	16015 ABR (5 un)	16016 ABR (5 un)
90x50 Modular Trunking - Cover - L75	16020 CBR	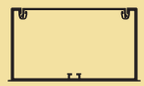	90x50 (16m)	16021 ABR (5 un)	16022 ABR (5 un)	16023 ABR (5 un)	16024 ABR (5 un)	16025 ABR (5 un)	16026 ABR (5 un)
155x50 Modular Trunking - Cover - L60	16030 CBR		155x50 (8m)	16031 ABR (5 un)	16032 ABR (5 un)	16033 ABR (5 un)	16034 ABR (5 un)	16035 ABR (5 un)	16036 ABR (5 un)
185x50 Modular Trunking - Cover - L75	16040 CBR		185x50 (8m)	16041 ABR (5 un)	16042 ABR (5 un)	16043 ABR (5 un)	16044 ABR (5 un)	16045 ABR (5 un)	16046 ABR (5 un)
90x65 Modular Trunking - Cover - L75	16050 CBR	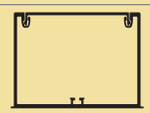	90x65 (16m)	16051 ABR (5 un)	16052 ABR (5 un)	16053 ABR (5 un)	16054 ABR (5 un)	16055 ABR (5 un)	16056 ABR (5 un)
185x65 Modular Trunking - Cover - L75	16060 CBR		185x65 (8m)	16061 ABR (5 un)	16062 ABR (5 un)	16063 ABR (5 un)	16064 ABR (5 un)	16065 ABR (5 un)	16066 ABR (5 un)

Note: Trunkings supplied with Protection Film.

COMPLETE RANGE of ACCESSORIES

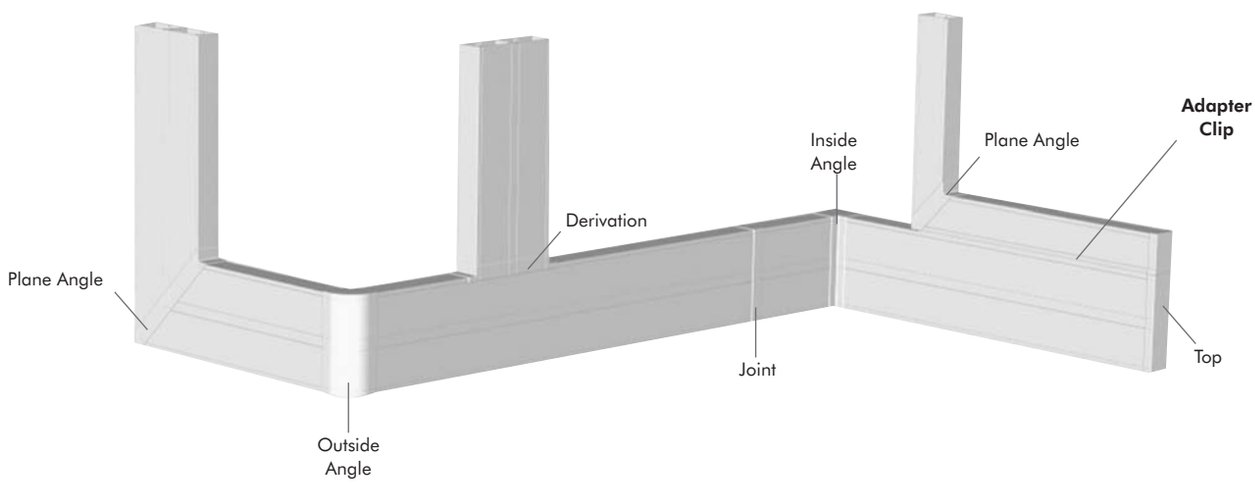

▪ **CBR** - White Complete Product; **ABR** - White Accessory.

EFAPEL

White Colour (RAL 9003)

Adapter Clip	Divider	Flush Mounting Box	Semi-Flush Mounting Box	Flush Mounting Box for Italian/American Type Mechanisms	Clip for Cable Support	Single Adapter for Modules of Q45 Series Trunkings with Covers of 60/75mm width	Double Adapter for Modules of Q45 Series Trunkings with Covers of 60mm width	Double Adapter for Modules of Q45 Series Trunkings with Covers of 75mm width	Triple Adapter for Modules of Q45 Series Trunkings with Covers of 60mm width	Triple Adapter for Modules of Q45 Series Trunkings with Covers of 75mm width
16971 ABR (48 m)	10099 (20 m)	—	—	—	—	10986 ABR (20 un)	10951 ABR (10 un)	—	10953 ABR (10 un)	—
16971 ABR (48 m)	10099 (20 m)	10984 ABR (10 un)	10985 ABR (10 un)	10971 ABR (10 un)	10987 ABR (50 un)	10986 ABR (20 un)	—	10952 ABR (10 un)	—	10954 ABR (10 un)
16971 ABR (48 m)	10099 (20 m)	—	—	—	—	10986 ABR (20 un)	10951 ABR (10 un)	—	10953 ABR (10 un)	—
16971 ABR (48 m)	10099 (20 m)	10984 ABR (10 un)	10985 ABR (10 un)	10971 ABR (10 un)	10987 ABR (50 un)	10986 ABR (20 un)	—	10952 ABR (10 un)	—	10954 ABR (10 un)
16971 ABR (48 m)	16972 ABR (20 m)	10984 ABR (10 un)	10985 ABR (10 un)	10971 ABR (10 un)	10987 ABR (50 un)	10986 ABR (20 un)	—	10952 ABR (10 un)	—	10954 ABR (10 un)
16971 ABR (48 m)	16972 ABR (20 m)	10984 ABR (10 un)	10985 ABR (10 un)	10971 ABR (10 un)	10987 ABR (50 un)	10986 ABR (20 un)	—	10952 ABR (10 un)	—	10954 ABR (10 un)

Innovation — MODULAR MOUNTING

1. Install the first trunking.
   Fix the second trunking by joining the edges of both bases.

2. Apply the Adapter Clip for Modular Trunkings (Ref. 16971 ABR).

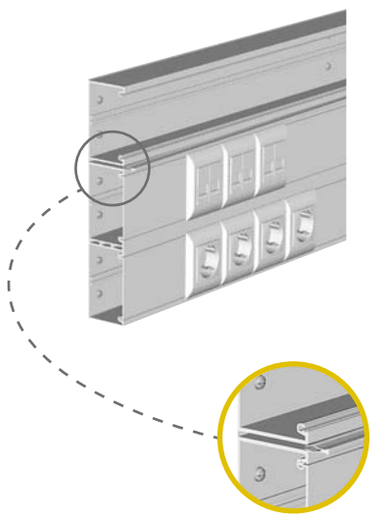

3. Finish the installation by mounting the covers, mechanisms and accessories.

16 Series - Distribution Modular Cable-trunkings

Selection Guide

Trunkings
with Covers of 60mm (L60) and 75mm (L75) Width

IP44 RoHS IK08

Designation	Ref.		Trunkings Characteristics				Isolated Cables Capacity				
			Internal Dim.	Length	Internal Section (S)	Available Section (Su)	Max. ø Available	Max. Nr. Conductors H07 V-U			
			(mm)	(m)	(mm²)	(S:1.4) (mm²)	(mm)	1.5mm²	2.5mm²	4mm²	6mm²
75x50 Modular Trunking		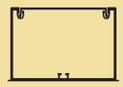	71x46	2,00	3266	2333	45	297	202	161	120
75x50 Modular Trunking with 1 Divider	16010 CBR (Cover - L60)	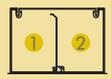	—	2,00	1 1630 2 1630	1164 1164	34 34	148 148	100 100	80 80	60 60
75x50 Modular Trunking with Flush Mounting Box			—	2,00	1466 **(a)**	1047	—	133	90	72	54
90x50 Modular Trunking		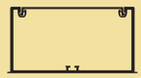	86x46	2,00	3956	2826	45	360	244	195	146
90x50 Modular Trunking with 1 Divider	16020 CBR (Cover - L75)	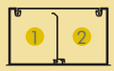	—	2,00	1 1975 2 1975	1411 1411	40 40	180 180	122 122	97 97	73 73
90x50 Modular Trunking with Flush Mounting Box			—	2,00	2156 **(a)**	1540	—	196	133	106	79
90x50 Modular Trunking with Semi-Flush Mounting Box			—	2,00	2733 **(a)**	1952	—	249	169	135	101
155x50 Modular Trunking			70x46 70x46	2,00	1 3220 2 3220	2300 2300	45 45	293 293	199 199	159 159	118 118
155x50 Modular Trunking with 2 Dividers	16030 CBR (Cover - L60)	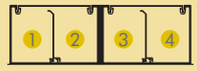	—	2,00	1 1607 2 1607 3 1607 4 1607	1148 1148 1148 1148	34 34 34 34	146 146 146 146	99 99 99 99	79 79 79 79	59 59 59 59
155x50 Modular Trunking with Flush Mounting Box			—	2,00	1 1420 2 1420 **(a)**	1014 1014	-	129 129	87 87	70 70	52 52

- **CBR** - White Complete Product.
- **(a)** - Section available with the biggest device.

Selection Guide (Continuation)

Trunkings with Covers of 60mm (L60) and 75mm (L75) Width

IP44 RoHS IK08

Designation	Ref.	Trunkings Characteristics: Internal Dim. (mm)	Length (m)	Internal Section (S) (mm²)	Available Section (Su) (S:1.4) (mm²)	Isolated Cables Capacity: Max. ø Available (mm)	Max. Nr. Conductors H07 V-U 1.5mm²	2.5mm²	4mm²	6mm²
185x50 Modular Trunking	16040 CBR (Cover - L75)	85x46 85x46	2,00	1 3910 2 3910	2793 2793	45 45	356 356	241 241	193 193	144 144
185x50 Modular Trunking with 1 Divider		—	2,00	1 1952 2 1952 3 1952 4 1952	1394 1394 1394 1394	40 40 40 40	178 178 178 178	120 120 120 120	96 96 96 96	72 72 72 72
185x50 Modular Trunking with Flush Mounting Box		—	2,00	1 2110 2 2110 (a)	1507 1507	—	192 192	130 130	104 104	78 78
185x50 Modular Trunking with Semi-Flush Mounting Box		—	2,00	1 2687 2 2687 (a)	1919 1919	—	244 244	166 166	133 133	99 99
90x65 Modular Trunking	16050 CBR (Cover - L75)	86x61	2,00	5246	3747	60	478	324	259	193
90x65 Modular Trunking with 1 Divider		—	2,00	1 2620 2 2620	1871 1871	40 40	238 238	162 162	129 129	96 96
90x65 Modular Trunking with Flush Mounting Box		—	2,00	3446 (a)	2461	—	314	213	170	127
90x65 Modular Trunking with Semi-Flush Mounting Box		—	2,00	4023 (a)	2874	—	366	248	199	148
185x65 Modular Trunking	16060 CBR (Cover - L75)	85x61 85x61	2,00	1 5185 2 5185	3704 3704	60 60	472 472	320 320	256 256	191 191
185x65 Modular Trunking with 1 Divider		—	2,00	1 2590 2 2590 3 2590 4 2590	1850 1850 1850 1850	40 40 40 40	236 236 236 236	160 160 160 160	128 128 128 128	95 95 95 95
185x65 Modular Trunking with Flush Mounting Box		—	2,00	1 3385 2 3385 (a)	2418 2418	—	308 308	209 209	167 167	125 125
185x65 Modular Trunking with Semi-Flush Mounting Box		—	2,00	1 3962 2 3962 (a)	2830 2830	—	361 361	244 244	196 196	146 146

EFAPEL

- **CBR** - White Complete Product.
- **(a)** - Section available with the biggest device .

13 Series - Trunkings for the Protection of Cables and Pipes

EN 50085-2-1 Standard

IP44 RoHS IK08

Trunkings				Accessories					
Designation	Ref.		L x H (m / box)	Variable Inside Angle	Plane Angle	Joint	Top	Variable Outside Angle	
25x30 Trunking	13010 CBR		25x30 (96m)	13012 ABR (10 un)	13013 ABR (10 un)	13014 ABR (10 un)	13015 ABR (10 un)	13016 ABR (10 un)	
40x40 Trunking	13020 CBR		40x40 (48m)	13022 ABR (10 un)	13023 ABR (10 un)	13024 ABR (10 un)	13025 ABR (10 un)	13026 ABR (10 un)	
60x40 Trunking	13030 CBR	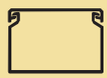	60x40 (32m)	13032 ABR (5 un)	13033 ABR (5 un)	13034 ABR (5 un)	13035 ABR (5 un)	13036 ABR (5 un)	
60x60 Trunking	13040 CBR		60x60 (24m)	13042 ABR (5 un)	13043 ABR (5 un)	13044 ABR (5 un)	13045 ABR (5 un)	13046 ABR (5 un)	
80x40 Trunking	13050 CBR		80x40 (24m)	13052 ABR (5 un)	13053 ABR (5 un)	13054 ABR (5 un)	13055 ABR (5 un)	13056 ABR (5 un)	
80x60 Trunking	13060 CBR	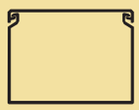	80x60 (16m)	13062 ABR (5 un)	13063 ABR (5 un)	13064 ABR (5 un)	13065 ABR (5 un)	13066 ABR (5 un)	
100x40 Trunking	13070 CBR	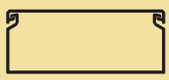	100x40 (20m)	13072 ABR (5 un)	13073 ABR (5 un)	13074 ABR (5 un)	13075 ABR (5 un)	13076 ABR (5 un)	
100x60 Trunking	13080 CBR	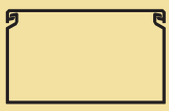	100x60 (16m)	13082 ABR (5 un)	13083 ABR (5 un)	13084 ABR (5 un)	13085 ABR (5 un)	13086 ABR (5 un)	

- **CBR** - White Complete Product; **ABR** - White Accessory.

White Colour (RAL 9003)

Selection Guide

Trunkings Characteristics				Cables, Tubes and Conductors Capacity				
Internal Dim.	Length	Internal Section (S)	Available Section (Su)	Max. ø Available	Max. Nr. Conductors H07 V-U			
(mm)	(m)	(mm^2)	(S:1.4) (mm^2)	(mm)	1.5mm^2	2.5mm^2	4mm^2	6mm^2
22x27	2,00	530,0	379	20	48	32	26	19
37x37	2,00	1280,6	915	35	116	79	63	47
56x37	2,00	1973,7	1410	35	180	122	97	73
56x56	2,00	3101,7	2216	55	282	191	153	114
73x36	2,00	2668,0	1906	35	243	164	132	98
76x56	2,00	4192,0	2994	55	382	259	207	154
96x36	2,00	3352,3	2395	35	305	207	166	123
96x56	2,00	5272,3	3766	55	480	325	260	194

14 Series - Trunkings for Electrical Panels

NFC 68-102 Standard

Trunkings

RoHS

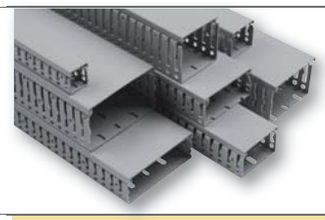

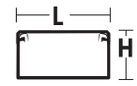

Designation	Ref.		L x H (m / box)
25x30 Trunking for Electrical Panels	14010 CCZ		25x30 (96m)
40x40 Trunking for Electrical Panels	14020 CCZ		40x40 (48m)
60x40 Trunking for Electrical Panels	14030 CCZ		60x40 (32m)
60x60 Trunking for Electrical Panels	14040 CCZ		60x60 (24m)
80x40 Trunking for Electrical Panels	14050 CCZ	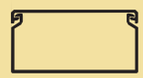	80x40 (24m)
80x60 Trunking for Electrical Panels	14060 CCZ		80x60 (16m)
100x40 Trunking for Electrical Panels	14070 CCZ	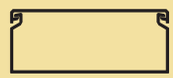	100x40 (20m)
100x60 Trunking for Electrical Panels	14080 CCZ	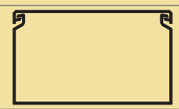	100x60 (16m)

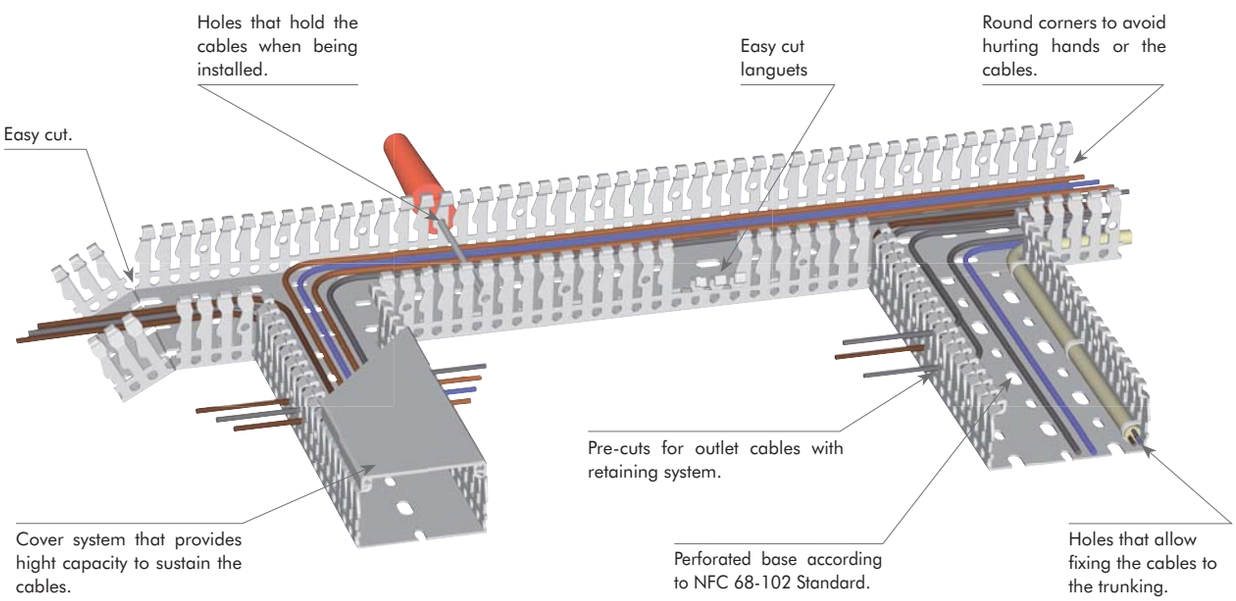

▪ **CCZ** - Grey Complete Product.

Grey Colour (RAL 7035)

Selection Guide

Trunkings Characteristics				Cables, Tubes and Conductors Capacity				
Internal Dim.	Length	Internal Section (S)	Available Section (Su)	Max. ø Available	Max. Nr. Conductors H07 V-U			
(mm)	(m)	(mm²)	(S:1.4) (mm²)	(mm)	1.5mm²	2.5mm²	4mm²	6mm²
22x27	2,00	530,0	379	20	48	32	26	19
37x37	2,00	1280,6	915	35	116	79	63	47
56x37	2,00	1973,7	1410	35	180	122	97	73
56x56	2,00	3101,7	2216	55	282	191	153	114
73x36	2,00	2668,0	1906	35	243	164	132	98
76x56	2,00	4192,0	2994	55	382	259	207	154
96x36	2,00	3352,3	2395	35	305	207	166	123
96x56	2,00	5272,3	3766	55	480	325	260	194

Base Perforation (in mm)

L	H	A	B	C	D	E	F
25	30	25	—	9	4,5	13	6,5
40	40	25	—	9	4,5	13	6,5
60	40	25	—	9	4,5	13	6,5
60	60	25	—	9	4,5	13	6,5
80	40	25	25	9	4,5	13	6,5
80	60	25	25	9	4,5	13	6,5
100	40	25	25	9	4,5	13	6,5
100	60	25	25	9	4,5	13	6,5

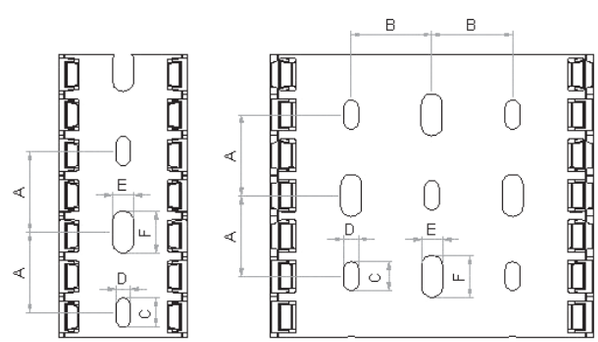

Lateral Perforation (in mm)

L	H	A	B	C	D	E	F
25	30	125	5	10,5	17	—	2,5
40	40	125	5	11,5	20	—	2,5
60	40	125	5	15	20	—	2,5
60	60	125	5	15	29	45	2,5
80	40	125	5	12	20	—	2,5
80	60	125	5	15	29	45	2,5
100	40	125	5	12	20	—	2,5
100	60	125	5	15	29	45	2,5

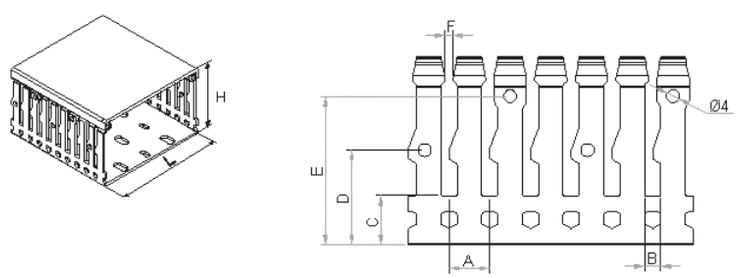

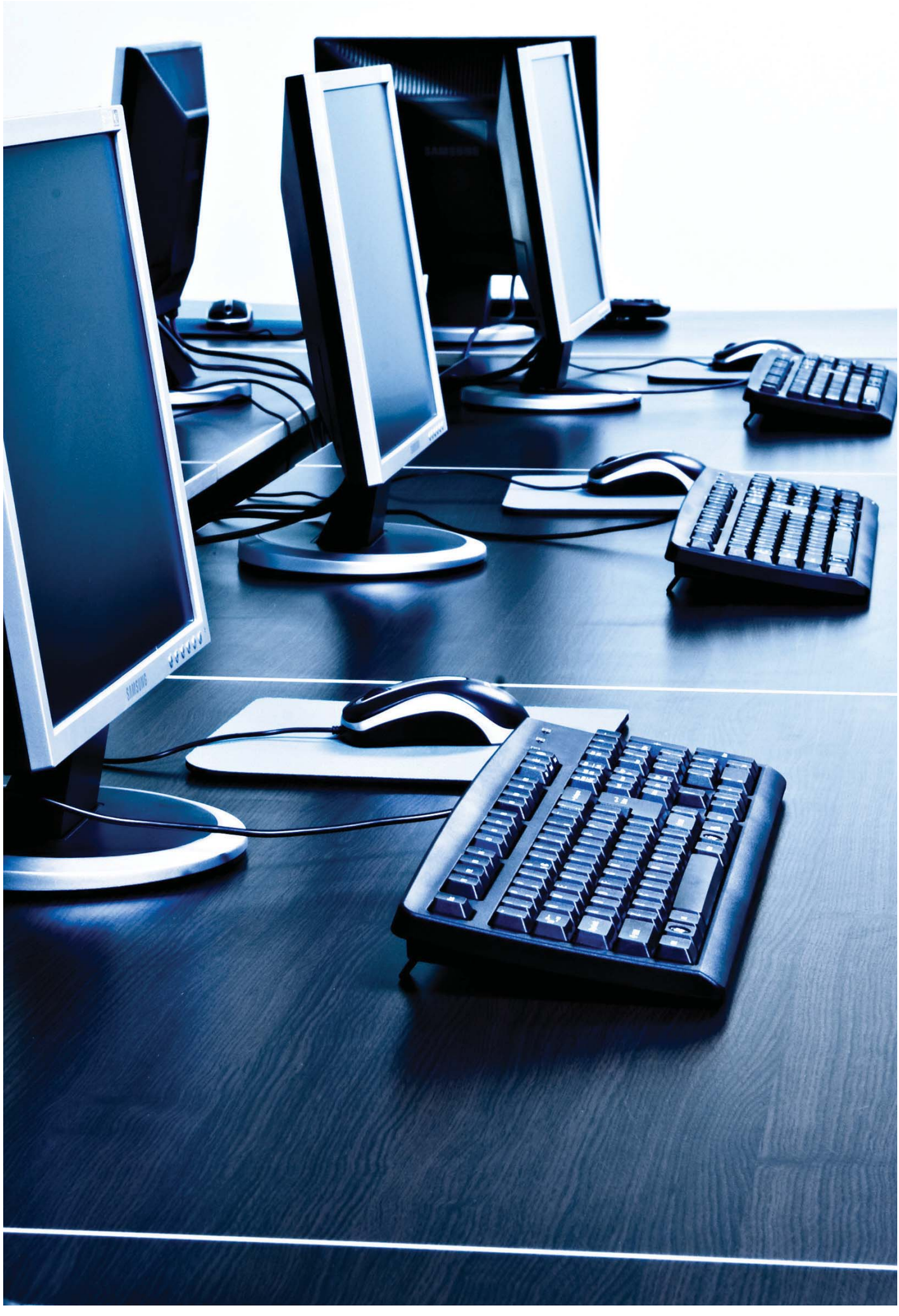
SAMSUNG

RJ45 Cat. 6 UTP Connector

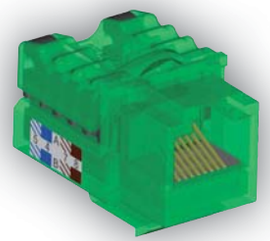

RJ45 Cat. 5e UTP Connector

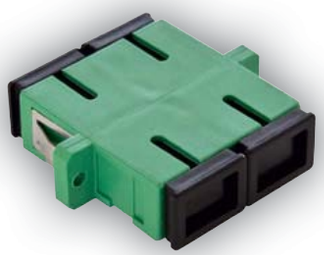

Copler for SC APC Duplex Fibre Optic Connector

Copler for LC Duplex Fibre Optic Connector

The **DVI Series** offers a set of products to satisfy the most exigent requests and uses in the **telecommunications installations** of **D**ata, **V**oice and **I**mage at **homes** or at the **offices**.

It has a **wide range** of **products** such as connectors, connection and distribution devices, surge protection devices and accessories, patch cords and cables, etc..

CONNECTORS

	Ref.	Colour	Box (Un)
RJ45 Cat. 6 UTP Connector (250 MHz)	21978	—	5
RJ45 Cat. 6 STP Connector (250 MHz)	21988	—	5
RJ45 Cat. 5e UTP Connector (100 MHz)	21975	—	20
RJ45 Cat. 5e STP Connector (100 MHz)	21985	—	5
Double RJ45 Cat. 5e UTP Connector (1 input / 2 outputs)	21980	—	5
RJ11 Cat. 3 Connector	21972	—	5
F Type Coaxial Cable Connector	21979	—	5

COUPLERS FOR FIBRE OPTIC CONNECTORS

	Ref.	Colour	Box (Un)
NEW Coupler for SC APC Duplex Fibre Optic Connector	82211	—	10
NEW Coupler for SC APC Simplex Fibre Optic Connector	82210	—	10
NEW Coupler for LC Duplex Fibre Optic Connector	82213	—	10

CONNECTION AND DISTRIBUTION DEVICES

	Ref.	Colour	Box (Un)
Telephone Plug - 8 Positions with 8 Contacts (Plug 8x8)	82028	—	20
Shielded RJ45 FTP Plug 8 Contacts	82029	—	20
Telephone Plug - 4 Positions with 4 Contacts (Plug 4x4)	82024	—	50
Telephone Plug - 6 Positions with 4 Contacts (Plug 6x4)	82025	—	50
Telephone Plug - 6 Positions with 6 Contacts (Plug 6x6)	82026	—	50
F Type Male Plug	82601	—	50
F Type 90° Male Plug	82602	—	20
F Type 90° Male + Female Plug	82603	—	20
TV Male + Female Plug	82611	—	50

SURGE PROTECTION DEVICES AND ACCESSORIES

	Ref.	Colour	Box (Un)
Ten Pairs Disconnection Module - DDS (Numbers from 1 to 10)	82511	—	10
Tem Pairs Derivation Device for Connection and Test - DDE	82512	—	10
F Type 75 Ohm Tap Terminator	82681	—	10
Eigth Outputs TV Splitter ▪ F type, 5MHz - 2,4GHz, 8dB, Flow DC.	82691	—	1
Four Outputs TV Splitter ▪ F type, 5MHz - 2,4GHz, 8dB, Flow DC.	82692	—	1
Two Pole Gas-filled Surge Arresters Cartridge	82521	—	10
Two Pole Gas-filled Surge Arrester	82522	—	100
Three Pole Gas-filled Surge Arresters Cartridge	82523	—	10
Three Pole Gas-filled Surge Arrester	82524	—	100
Plastic Cover for Two or Three Pole Surge Arresters Cartridges	82525	—	10
Identification Plug of 1 - 10 Pairs	82531	—	20
Identification Plug of 10 - 100 Pairs	82532	—	20
Disconnection Plug	82535	—	10

SURGE PROTECTION DEVICES AND ACCESSORIES

	Ref.	Colour	Box (Un)
Fast Connector for 2 or 3 Conductors	82536	—	100
Label Holder for DDE/DDS Modules	82537	—	10
Label Holder for Mounting Frames	82538	—	10
Mounting Support for 1 DDE/DDS Module (12mm height)	82541	—	2
Mounting Support for 2 DDE/DDS Modules (12mm height)	82542	—	2
Mounting Support for 1 DDE/DDS Module (22mm height)	82543	—	2
Mounting Support for 2 DDE/DDS Modules (22mm height)	82544	—	2
Mounting Support for 3 DDE/DDS Modules (22mm height)	82545	—	2
Mounting Support for 5 DDE/DDS Modules (22mm height)	82546	—	2
Mounting Support for 10 DDE/DDS Modules (22mm height)	82547	—	2
Mounting Support for 11 DDE/DDS Modules (22mm height)	82551	—	1
Mounting Support for 27 DDE/DDS Modules (22mm height)	82552	—	1

PATCH CORDS AND CABLES

	Ref.	Colour	Box (Un)
Plain Telephone Cord with 6x4 RJ Plug and 4 "Y" Terminals **(2m length)**	82032	—	1
Plain Telephone Cord with 6x4 RJ Plug and 4 "Y" Terminals **(5m length)**	82035	—	1
Plain Telephone Cord with Two RJ 6x4 Plugs **(2m length)**	82042	—	1
Plain Telephone Cord with Two RJ 6x4 Plugs **(5m length)**	82045	—	1
Spiral Telephone Cord with Two RJ 4x4 Plugs **(2m length)**	82052	—	1
Spiral Telephone Cord with Two RJ 4x4 Plugs **(5m length)**	82055	—	1
Antenna Cord with 1 Male and 1 Female Plugs **(1,5m length)**	82591 A	BR	5
Antenna Cord with 1 Male and 1 Female Plugs **(3m length)**	82593 A	BR	5
Antenna Cord with 1 Male and 1 Female Plugs **(5m length)**	82595 A	BR	5
Patch Cord of 4 Pairs UTP Cable Cat. 5e and 2 RJ45 Male Plugs **(0,5m length)**	82621 A	CZ	5
Patch Cord of 4 Pairs UTP Cable Cat. 5e and 2 RJ45 Male Plugs **(3m length)**	82622 A	CZ	5
Patch Cord of 4 Pairs UTP Cable Cat. 5e and 2 RJ45 Male Plugs **(5m length)**	82625 A	CZ	5
Patch Cord of 4 Pairs FTP Cable Cat. 5e and 2 RJ45 Male Plugs **(0,5m length)**	82631 A	CZ	5
Patch Cord of 4 Pairs FTP Cable Cat. 5e and 2 RJ45 Male Plugs **(3m length)**	82632 A	CZ	5
Patch Cord of 4 Pairs FTP Cable Cat. 5e and 2 RJ45 Male Plugs **(5m length)**	82635 A	CZ	5
Patch Cord of 4 Pairs UTP Cable Cat. 6 and 2 RJ45 Male Plugs **(0,5m length)**	82641 A	CZ	5
Patch Cord of 4 Pairs UTP Cable Cat. 6 and 2 RJ45 Male Plugs **(3m length)**	82642 A	CZ	5
Patch Cord of 4 Pairs UTP Cable Cat. 6 and 2 RJ45 Male Plugs **(5m length)**	82645 A	CZ	5
Patch Cord of 4 Pairs FTP Cable Cat. 6 and 2 RJ45 Male Plugs **(0,5m length)**	82651 A	CZ	5
Patch Cord of 4 Pairs FTP Cable Cat. 6 and 2 RJ45 Male Plugs **(3m length)**	82652 A	CZ	5
Patch Cord of 4 Pairs FTP Cable Cat. 6 and 2 RJ45 Male Plugs **(5m length)**	82655 A	CZ	5

- **A** - Accessory.
- **BR** - White; **CZ** - Grey.

TOOLS

	Ref.	Colour	Box (Un)
Crimping Tool for 4x4 Plugs	82064	—	1
Crimping Tool for 6x4, 6x6 or 8x8 RJ Plugs	82581	—	1
Two Pole Test Cord	82533	—	1
Four Pole Test Cord	82534	—	1
Insertion Tool (with or without Cutting Function)	82561	—	1
Protecting Bag for Insertion Tool	82562	—	1

TELEPHONE CONNECTION DEVICES FOR USERS - BPA

	Ref.	Colour	Box (Un)
BPA - S (Simple)	82011	—	10
BPA - D (with Gas-filled Surge Arresters)	82012	—	10
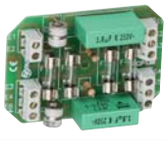 BPA - F (with Fuses and Gas-filled Surge Arresters)	82013	—	10

NAILS
RCDolner

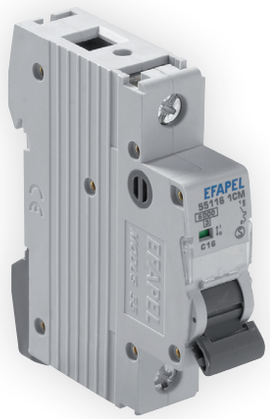

Miniature Circuit Breaker

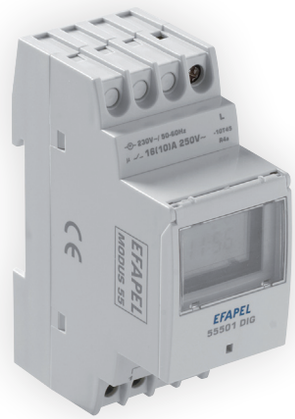

Digital Clock Switch

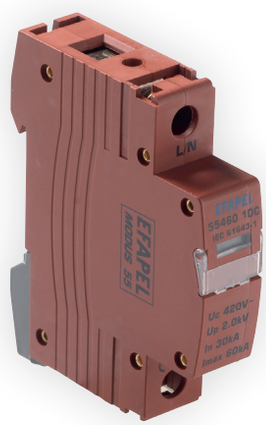

Over-voltage Surge Protection Device

Pilot Light

- **Miniature Circuit Breakers** (4,5kA, 6kA and 10kA) - page 144;
- **Residual Current Circuit Breakers** AC Class and A Class - page 150;
- **Over-voltage and Surge Protection Devices** - page 151;
- **Controls, Signalling Devices and Energy Management** - page 152;
- **DIN Accessories** - page 154.

Easy Mounting

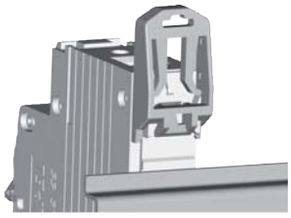

- **Fixing Plastic Clip with two defined positions:**
  - Allows to dismounting each product in a independent way;
  - Allows to adjust the location of each product into the panel without difficulties;
  - Allows the assembly / disassembly without tools;
  - DIN Track 46277.

- **Connection Terminals compatible with all types of connection:**
  - Rigid Cables;
  - Flexible Cables;
  - Terminals "Pin Type";
  - Terminals "U Type".

Exclusive Design

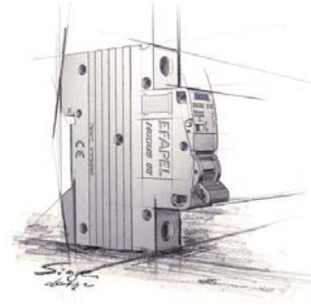

- **Grey Colour (RAL 7035)**
- **Lateral Channels to improve the heat dissipation**
- **All the indications are printed on each product:**
  - Type of product;
  - Electrical and Operational Characteristics;
  - Indication of the Operational Status through Colour Indicators (Green - OFF, Red - ON);
  - Transparent window to place an Identification Card.

MINIATURE CIRCUIT BREAKERS (MCB)

CODIFICATION RULES and IDENTIFICATION CRITERIA

DIGITS OF THE REFERENCE						
1º and 2º	3º	4º and 5º		6º	7º	8º
SERIES	MINIATURE CIRCUIT BREAKER	RATED CURRENT		NUMBER OF POLES	TRIPPING CURVE	BREAKING CAPACITY
55	**1**	**01** — 1A **02** — 2A **03** — 3A **04** — 4A **06** — 6A **10** — 10A **16** — 16A **20** — 20A **25** — 25A **32** — 32A **40** — 40A **50** — 50A **63** — 63A	EMPTY SPACE	**1** — 1P **2** — 2P **3** — 3P **4** — 4P **5** — 1P+N (1 mod.) **6** — 1P+N (2 mod.)	**B** **C** **D**	**P**LUS — 4,5kA **S**UPER — 6kA **U**LTRA — 10kA

Example: Miniature Circuit Breaker of **16**A (rated current), **3**P (poles), tripping curve **C**, with 6kA of breaking capacity (**S**UPER) — Ref. **55116 3CS**

MINIATURE CIRCUIT BREAKERS (MCB) **PLUS** TYPE

IEC 60898

Symbol	Designation	Rated Current (A)	Mod. DIN	Ref. / Tripping Curve: B	Ref. / Tripping Curve: C	Ref. / Tripping Curve: D	Box (Un)
	MCB - 1P - 4,5kA 230/400V~ - 50/60Hz	6	1	—	**55106 1CP**	—	12
		10		—	**55110 1CP**	—	
		16		—	**55116 1CP**	—	
		20		—	**55120 1CP**	—	
		25		—	**55125 1CP**	—	
		32		—	**55132 1CP**	—	
		40		—	**55140 1CP**	—	
		50		—	**55150 1CP**	—	
		63		—	**55163 1CP**	—	
	MCB - 1P+N - 4,5kA 230V~ - 50/60Hz	2	1	—	**55102 5CP**	—	12
		6		—	**55106 5CP**	—	
		10		—	**55110 5CP**	—	
		16		—	**55116 5CP**	—	
		20		—	**55120 5CP**	—	
		25		—	**55125 5CP**	—	
		32		—	**55132 5CP**	—	
		40	2	—	**55140 6CP**	—	6
		50		—	**55150 6CP**	—	
		63		—	**55163 6CP**	—	
	MCB - 2P - 4,5kA 400V~ - 50/60Hz	6	2	—	**55106 2CP**	—	6
		10		—	**55110 2CP**	—	
		16		—	**55116 2CP**	—	
		20		—	**55120 2CP**	—	
		25		—	**55125 2CP**	—	
		32		—	**55132 2CP**	—	
		40		—	**55140 2CP**	—	
		50		—	**55150 2CP**	—	
		63		—	**55163 2CP**	—	
	MCB - 3P - 4,5kA 400V~ - 50/60Hz	6	3	—	**55106 3CP**	—	4
		10		—	**55110 3CP**	—	
		16		—	**55116 3CP**	—	
		20		—	**55120 3CP**	—	
		25		—	**55125 3CP**	—	
		32		—	**55132 3CP**	—	
		40		—	**55140 3CP**	—	
		50		—	**55150 3CP**	—	
		63		—	**55163 3CP**	—	
	MCB - 4P - 4,5kA 400V~ - 50/60Hz	6	4	—	**55106 4CP**	—	3
		10		—	**55110 4CP**	—	
		16		—	**55116 4CP**	—	
		20		—	**55120 4CP**	—	
		25		—	**55125 4CP**	—	
		32		—	**55132 4CP**	—	
		40		—	**55140 4CP**	—	
		50		—	**55150 4CP**	—	
		63		—	**55163 4CP**	—	

MINIATURE CIRCUIT BREAKERS (MCB) **SUPER** TYPE

IEC 60898

Symbol	Designation	Rated Current (A)	Mod. DIN	Ref. / Tripping Curve: B	Box (Un)	Ref. / Tripping Curve: C	Ref. / Tripping Curve: D	Box (Un)
	MCB - 1P - 6kA 230/400V~ - 50/60Hz	1	1	55101 1BS	1	**55101 1CS**	55101 1DS	1
		2		55102 1BS		**55102 1CS**	55102 1DS	
		3		55103 1BS		**55103 1CS**	55103 1DS	
		4		55104 1BS		**55104 1CS**	55104 1DS	
		6		55106 1BS		**55106 1CS**	55106 1DS	
		10		55110 1BS		**55110 1CS**	55110 1DS	
		16		55116 1BS		**55116 1CS**	55116 1DS	
		20		55120 1BS		**55120 1CS**	55120 1DS	
		25		55125 1BS	12	**55125 1CS**	55125 1DS	12
		32		55132 1BS		**55132 1CS**	55132 1DS	
		40		55140 1BS		**55140 1CS**	55140 1DS	
		50		55150 1BS		**55150 1CS**	55150 1DS	
		63		55163 1BS		**55163 1CS**	55163 1DS	
	MCB - 1P+N - 6kA 230V~ - 50/60Hz	1	2	55101 6BS	1	**55101 6CS**	—	1
		2		55102 6BS		**55102 6CS**	—	
		3		55103 6BS		**55103 6CS**	—	
		4		55104 6BS		**55104 6CS**	—	
		6		55106 6BS		**55106 6CS**	—	
		10		55110 6BS		**55110 6CS**	—	
		16		55116 6BS		**55116 6CS**	—	
		20		55120 6BS		**55120 6CS**	—	
		25		55125 6BS	6	**55125 6CS**	—	6
		32		55132 6BS		**55132 6CS**	—	
		40		55140 6BS		**55140 6CS**	—	
		50		55150 6BS		**55150 6CS**	—	
		63		55163 6BS		**55163 6CS**	—	
	MCB - 2P - 6kA 400V~ - 50/60Hz	1	2	55101 2BS	1	**55101 2CS**	55101 2DS	1
		2		55102 2BS		**55102 2CS**	55102 2DS	
		3		55103 2BS		**55103 2CS**	55103 2DS	
		4		55104 2BS		**55104 2CS**	55104 2DS	
		6		55106 2BS		**55106 2CS**	55106 2DS	
		10		55110 2BS		**55110 2CS**	55110 2DS	
		16		55116 2BS		**55116 2CS**	55116 2DS	
		20		55120 2BS		**55120 2CS**	55120 2DS	
		25		55125 2BS	6	**55125 2CS**	55125 2DS	6
		32		55132 2BS		**55132 2CS**	55132 2DS	
		40		55140 2BS		**55140 2CS**	55140 2DS	
		50		55150 2BS		**55150 2CS**	55150 2DS	
		63		55163 2BS		**55163 2CS**	55163 2DS	

MINIATURE CIRCUIT BREAKERS (MCB) **SUPER** TYPE

IEC 60898

Symbol	Designation	Rated Current (A)	Mod. DIN	Ref. / Tripping Curve: B	Box (Un)	Ref. / Tripping Curve: C	Ref. / Tripping Curve: D	Box (Un)
	MCB - 3P - 6kA 400V~ - 50/60Hz	1	3	55101 3BS	1	**55101 3CS**	55101 3DS	1
		2		55102 3BS		**55102 3CS**	55102 3DS	
		3		55103 3BS		**55103 3CS**	55103 3DS	
		4		55104 3BS		**55104 3CS**	55104 3DS	
		6		55106 3BS	4	**55106 3CS**	55106 3DS	4
		10		55110 3BS		**55110 3CS**	55110 3DS	
		16		55116 3BS		**55116 3CS**	55116 3DS	
		20		55120 3BS		**55120 3CS**	55120 3DS	
		25		55125 3BS		**55125 3CS**	55125 3DS	
		32		55132 3BS		**55132 3CS**	55132 3DS	
		40		55140 3BS		**55140 3CS**	55140 3DS	
		50		55150 3BS		**55150 3CS**	55150 3DS	
		63		55163 3BS		**55163 3CS**	55163 3DS	

Symbol	Designation	Rated Current (A)	Mod. DIN	Ref. / Tripping Curve: B	Box (Un)	Ref. / Tripping Curve: C	Ref. / Tripping Curve: D	Box (Un)
	MCB - 4P - 6kA 400V~ - 50/60Hz	1	4	55101 4BS	1	**55101 4CS**	55101 4DS	1
		2		55102 4BS		**55102 4CS**	55102 4DS	
		3		55103 4BS		**55103 4CS**	55103 4DS	
		4		55104 4BS		**55104 4CS**	55104 4DS	
		6		55106 4BS	3	**55106 4CS**	55106 4DS	3
		10		55110 4BS		**55110 4CS**	55110 4DS	
		16		55116 4BS		**55116 4CS**	55116 4DS	
		20		55120 4BS		**55120 4CS**	55120 4DS	
		25		55125 4BS		**55125 4CS**	55125 4DS	
		32		55132 4BS		**55132 4CS**	55132 4DS	
		40		55140 4BS		**55140 4CS**	55140 4DS	
		50		55150 4BS		**55150 4CS**	55150 4DS	
		63		55163 4BS		**55163 4CS**	55163 4DS	

MINIATURE CIRCUIT BREAKERS (MCB) ULTRA TYPE

IEC 60898

Symbol	Designation	Rated Current (A)	Mod. DIN	Ref. / Tripping Curve: B	Box (Un)	Ref. / Tripping Curve: C	Ref. / Tripping Curve: D	Box (Un)
	MCB - 1P - 10kA 230/400V~ - 50/60Hz	1	1	55101 1BU	1	**55101 1CU**	55101 1DU	1
		2		55102 1BU		**55102 1CU**	55102 1DU	
		3		55103 1BU		**55103 1CU**	55103 1DU	
		4		55104 1BU		**55104 1CU**	55104 1DU	
		6		55106 1BU	1	**55106 1CU**	55106 1DU	12
		10		55110 1BU		**55110 1CU**	55110 1DU	
		16		55116 1BU		**55116 1CU**	55116 1DU	
		20		55120 1BU		**55120 1CU**	55120 1DU	
		25		55125 1BU		**55125 1CU**	55125 1DU	
		32		55132 1BU		**55132 1CU**	55132 1DU	
		40		55140 1BU		**55140 1CU**	55140 1DU	
		50		55150 1BU		**55150 1CU**	55150 1DU	
		63		55163 1BU		**55163 1CU**	55163 1DU	
	MCB - 2P - 10kA 400V~ - 50/60Hz	1	2	55101 2BU	1	**55101 2CU**	55101 2DU	1
		2		55102 2BU		**55102 2CU**	55102 2DU	
		3		55103 2BU		**55103 2CU**	55103 2DU	
		4		55104 2BU		**55104 2CU**	55104 2DU	
		6		55106 2BU	1	**55106 2CU**	55106 2DU	6
		10		55110 2BU		**55110 2CU**	55110 2DU	
		16		55116 2BU		**55116 2CU**	55116 2DU	
		20		55120 2BU		**55120 2CU**	55120 2DU	
		25		55125 2BU		**55125 2CU**	55125 2DU	
		32		55132 2BU		**55132 2CU**	55132 2DU	
		40		55140 2BU		**55140 2CU**	55140 2DU	
		50		55150 2BU		**55150 2CU**	55150 2DU	
		63		55163 2BU		**55163 2CU**	55163 2DU	
	MCB - 3P - 10kA 400V~ - 50/60Hz	1	3	55101 3BU	1	**55101 3CU**	55101 3DU	1
		2		55102 3BU		**55102 3CU**	55102 3DU	
		3		55103 3BU		**55103 3CU**	55103 3DU	
		4		55104 3BU		**55104 3CU**	55104 3DU	
		6		55106 3BU	1	**55106 3CU**	55106 3DU	4
		10		55110 3BU		**55110 3CU**	55110 3DU	
		16		55116 3BU		**55116 3CU**	55116 3DU	
		20		55120 3BU		**55120 3CU**	55120 3DU	
		25		55125 3BU		**55125 3CU**	55125 3DU	
		32		55132 3BU		**55132 3CU**	55132 3DU	
		40		55140 3BU		**55140 3CU**	55140 3DU	
		50		55150 3BU		**55150 3CU**	55150 3DU	
		63		55163 3BU		**55163 3CU**	55163 3DU	

MINIATURE CIRCUIT BREAKERS (MCB) ULTRA TYPE

IEC 60898

Symbol	Designation	Rated Current (A)	Mod. DIN	Ref. / Tripping Curve: B	Box (Un)	Ref. / Tripping Curve: C	Ref. / Tripping Curve: D	Box (Un)
	MCB - 4P - 10kA 400V~ - 50/60Hz	1	4	55101 4BU	1	**55101 4CU**	55101 4DU	1
		2		55102 4BU		**55102 4CU**	55102 4DU	
		3		55103 4BU		**55103 4CU**	55103 4DU	
		4		55104 4BU		**55104 4CU**	55104 4DU	
		6		55106 4BU		**55106 4CU**	55106 4DU	3
		10		55110 4BU		**55110 4CU**	55110 4DU	
		16		55116 4BU		**55116 4CU**	55116 4DU	
		20		55120 4BU		**55120 4CU**	55120 4DU	
		25		55125 4BU		**55125 4CU**	55125 4DU	
		32		55132 4BU		**55132 4CU**	55132 4DU	
		40		55140 4BU		**55140 4CU**	55140 4DU	
		50		55150 4BU		**55150 4CU**	55150 4DU	
		63		55163 4BU		**55163 4CU**	55163 4DU	

RESIDUAL CURRENT CIRCUIT BREAKERS (RCCB) DIF TYPE — IEC 61008

CODIFICATION RULES and IDENTIFICATION CRITERIA

DIGITS OF THE REFERENCE						
1º and 2º	3º	4º and 5º		6º	7º	8º
SERIES	RESIDUAL CURRENT CIRCUIT BREAKERS	RATED CURRENT		NUMBER OF POLES	SENSIBILITY	CLASS
55	2	**16** — 16A **25** — 25A **40** — 40A **63** — 63A	EMPTY SPACE	**2** — 2P **4** — 4P	**A** — 10mA **B** — 30mA **D** — 300mA **E** — 500mA	**A** — A **C** — AC

Example: Residual Current Circuit Breaker of **25**A (rated current), **2**P (poles), sensibility of 30mA (**B**) and **AC** (class) — Ref. 55225 2BC

	Symbol	Designation	Rated Current (A)	Mod. DIN	Ref. / Class: AC (~)	Ref. / Class: A (⩘)	Box (Un)
	230V~ 50/60Hz 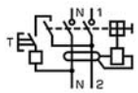	RCCB 2P - 10mA	16	2	**55216 2AC**	—	1
			25		**55225 2AC**	—	
		RCCB 2P - 30mA	16	2	**55216 2BC**	55216 2BA	1
			25		**55225 2BC**	55225 2BA	
			40		**55240 2BC**	55240 2BA	
			63		**55263 2BC**	55263 2BA	
		RCCB 2P - 300mA	25	2	**55225 2DC**	55225 2DA	1
			40		**55240 2DC**	55240 2DA	
			63		**55263 2DC**	55263 2DA	
		RCCB 2P - 500mA	25	2	**55225 2EC**	—	1
			40		**55240 2EC**	—	
			63		**55263 2EC**	—	
	400V~ 50/60Hz 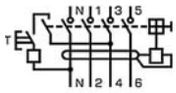	RCCB 4P - 30mA	25	4	**55225 4BC**	55225 4BA	1
			40		**55240 4BC**	55240 4BA	
			63		**55263 4BC**	55263 4BA	
		RCCB 4P - 300mA	25	4	**55225 4DC**	55225 4DA	1
			40		**55240 4DC**	55240 4DA	
			63		**55263 4DC**	55263 4DA	
		RCCB 4P - 500mA	25	4	**55225 4EC**	—	1
			40		**55240 4EC**	—	
			63		**55263 4EC**	—	

⩘ **Transient Protection** - The Residual Current Circuit Breakers DIF Type are protected against nuisance tripping caused by transient leakage currents (lightning, capacitive loads).

~ **AC Class** - General purpose, protects the environment in the presence of leakage of current with a purely sinusoidal waveform.

⩘ **A Class** - For facilities with equipment such as rectifiers, triacs, etc., causing a leakage of current with DC current components, undetectable by the AC Class devices.

OVER-VOLTAGE AND SURGE PROTECTION DEVICES (SPD) **POWER** TYPE

IEC 61643-1

	Symbol	Designation	Rated Voltage (COV) (Un/Uc)	Imax (kA)	Mod. DIN	Ref.	Box (Un)
		SPD - 1P	230/320V~ 50/60Hz	10		55410 1DC	2
		SPD - 1P	230/320V~ 50/60Hz	20		55420 1DC	2
					1		
		SPD - 1P	230/320V~ 50/60Hz	40		55440 1DC	2
		SPD - 1P	380/420V~ 50/60Hz	60		55460 1DC	2

SWITCHES, SIGNALLING DEVICES AND ENERGY MANAGEMENT

ISOLATOR SWITCHES

IEC 60947-3

	Symbol	Designation	Rated Voltage (Un)	Rated Current In (A)	Mod. DIN	Ref.	Box (Un)
		Isolator Switch - 1P	250/415V~ 50/60Hz	25	1	55525 1IT	12
				32		55532 1IT	
				40		55540 1IT	
				63		55563 1IT	
				80		55580 1IT	
				100		55500 1IT	
		Isolator Switch - 2P	250/415V~ 50/60Hz	25	2	55525 2IT	1
				32		55532 2IT	
				40		55540 2IT	
				63		55563 2IT	
				80		55580 2IT	
				100		55500 2IT	
		Isolator Switch - 3P	250/415V~ 50/60Hz	25	3	55525 3IT	1
				32		55532 3IT	
				40		55540 3IT	
				63		55563 3IT	
				80		55580 3IT	
				100		55500 3IT	
	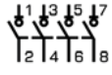	Isolator Switch - 4P	250/415V~ 50/60Hz	25	4	55525 4IT	1
				32		55532 4IT	
				40		55540 4IT	
				63		55563 4IT	
				80		55580 4IT	
				100		55500 4IT	

PILOT LIGHTS

	Symbol	Designation	Colour	Power (W)	Mod. DIN	Ref.	Box (Un)
		Pilot Light with Diffuser 230V~ - 50/60Hz	Green	<1	1	55560 VRD	1
			Red			55560 VRM	
			Orange			55560 LAR	

SWITCHES, SIGNALLING DEVICES AND ENERGY MANAGEMENT

DOORBELL TRANSFORMER

	Symbol	Designation	Power	Secondary Voltage (V)	Mod. DIN	Ref.	Box (Un)
		Doorbell Transformer	8VA	8 - 12 - 24	2	55508 TRF	1

DOORBELL

	Symbol	Designation	Power	Voltage (V)	Mod. DIN	Ref.	Box (Un)
		Doorbell	5VA	12	1	55505 CMP	1
			6,5VA	230		55565 CMP	

STAIRCASE TIME-DELAY SWITCH

	Designation	Rated Current (In)	Mod. DIN	Ref.	Box (Un)
	Staircase Time-Delay Switch 230V~ - 50/60Hz	10	1	55510 SPA	1

CONTACTOR

	Designation	Type	Rated Current (A)	Mod. DIN	Ref.	Box (Un)
	Contactor 2 Pole 230V~ - 50/60Hz	2 NA	20	1	55502 CTR	1

CLOCK SWITCHES

	Designation	Type	Rated Current (A)	Mod. DIN	Ref.	Box (Un)
	Clock Switch of 1 Channel 230V~ - 50/60Hz	Analogue Daily	16	1	55501 ANL	1
		Digital Daily / Weekly		2	55501 DIG	

DIN ACCESSORIES

BUSBARS

	Designation	Imax (A)	Lenght (m)	Ref.	Box (Un)
Pin Type Busbars					
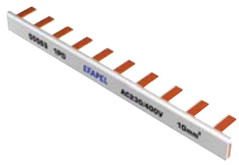	Pin Type Busbar - 1P			55563 1PD	
	Pin Type Busbar - 2P	63	1	55563 2PD	10
	Pin Type Busbar - 3P			55563 3PD	
	Pin Type Busbar - 4P			55563 4PD	
"U" Type Busbars					
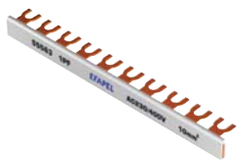	"U" Type Busbar - 1P			55563 1PF	
	"U" Type Busbar - 2P	63	1	55563 2PF	10
	"U" Type Busbar - 3P			55563 3PF	
	"U" Type Busbar - 4P			55563 4PF	
Flat Busbars					
	Flat Busbar - 1P - 13 Theeth	63	—	55563 1WP	10
	Flat Busbar - 1P		1	55563 1PP	
Top for Pin Type Busbars					
	Top for Pin Type Busbar - 1P			55563 1TP	
	Top for Pin Type Busbars - 2P	—	—	55563 2TP	10
	Top for Pin Type Busbars - 3P			55563 3TP	
	Top for Pin Type Busbars - 4P			55563 4TP	

DIN ACCESSORIES

ENERGY SOCKETS

IEC 60884-1 / NF C 61- 316

Designation	Colour	Rated Current (A)	Mod. DIN	Ref.	Box (Un)
Safety Earth Socket (Schuko Type) 16A - 250V~	White	16	2,5	55532 CBR	4
	Red			55532 CVM	
	Orange			55532 CLR	
Earth Socket (Schuko Type) 16A - 250V~	White			55531 CBR	
	Red			55531 CVM	
	Orange			55531 CLR	
Earth Socket (Schuko Type) with Blockage 16A - 250V~	Red			55536 CVM	
Earth Socket (Schuko Type) with Blockage and Signal Lamp 16A - 250V~				55537 CVM	
Safety Earth Socket (French Type) 16A - 250V~	White			55512 CBR	
	Red			55512 CVM	
	Orange			55512 CLR	
Earth Socket (French Type) 16A - 250V~	White			55511 CBR	
	Red			55511 CVM	
	Orange			55511 CLR	
Earth Socket (French Type) with Blockage 16A - 250V~	Red			55516 CVM	
Earth Socket (French Type) with Blockage and Signal Lamp 16A - 250V~				55517 CVM	

ACCESSORIES

	Designation	Rated Current (A)	Colour	Mod. DIN	Ref.	Box (Un)
	Adapter for Q45 Modules to Electrical Panels	—	BR	—	45990 A	10
	Blocking Pin for Q45 Series Sockets	—	—	—	45991	25
	Two Lateral Connector IP2X ▪ Terminal's Capacity to 25mm².	63	–	1	55563 1LG	10

Accessories for Electrical Installations

E27 Lamp-holder for Ceiling Mounting

Six Outlets Schuko Sockets

Double Schuko Adapter with 90° Outputs

Large E14 - 5W Lamp

This range of products is composed by **several** and **useful products** for the day-by-day work and for remodelling or fixing electrical installations, such as lamps, lamp-holders, plastic fittings, plugs, multiple outlet sockets, extension cords, etc.

Accessories for Electrical Installations

LAMPS

	Ref.	Colour	Box (Un)
Large E14 - 5W Lamp 250V~	81011	—	10
Small E14 - 5W Lamp 250V~	81012	—	10

LEDs

	Ref.	Colour	Box (Un)
Replacement LED for Lighted Mechanisms of MEC 21 / 48 Series - 250V~ ▪ 110/250V~	81019	—	10
Replacement LED for Lighted Mechanisms of MEC 21 / 48 Series - 12V ▪ 12V	81018	—	10

PLASTIC FITTINGS

	Ref.	Colour	Box (Un)
5mm Fitting (100 Units)	81052	—	1
5mm Fitting (500 Units)	81053	—	1
5mm Fitting (1000 Units)	81054	—	1
5mm Fitting (5000 Units)	81055	—	1
6mm Fitting (100 Units)	81062	—	1
6mm Fitting (500 Units)	81063	—	1
6mm Fitting (1000 Units)	81064	—	1
6mm Fitting (5000 Units)	81065	—	1
8mm Fitting (100 Units)	81082	—	1
8mm Fitting (500 Units)	81083	—	1
8mm Fitting (1000 Units)	81084	—	1

Accessories for Electrical Installations

PLASTIC FITTINGS

	Ref.	Colour	Box (Un)
10mm Fitting (100 Units)	81102	—	1
10mm Fitting (500 Units)	81103	—	1
10mm Fitting (1000 Units)	81104	—	1

LAMP-HOLDERS

	Ref.	Colour	Box (Un)
E27 Lamp-holder for Ceiling Mounting 200W Max. - 250V~	81201	—	20
E27 Lamp-holder for Luminaries 4A - 250V~	81211	—	20
E27 Lamp-holder for Table Lamps 4A - 250V~	81221	—	20
E27 Base Lamp-holder 4A - 250V~	81251	—	10

PLUGS

	Ref.	Colour	Box (Un)
Male Schuko Plug 16A - 250V~	81502	—	20
Male Schuko Plug 16A - 250V~ - With Input 90°	81503	—	20
Male 2P Plug 6A - 250V~	81501	—	20
Female Schuko Plug 16A - 250V~	81504	—	20

Accessories for Electrical Installations

ADAPTERS

	Ref.	Colour	Box (Un)
Triple Schuko Adapter 16A - 250V~ - With Linear Outputs	81505	—	5
Triple Schuko Adapter 16A - 250V~ - With 90º Outputs	81506	—	10
Double Schuko Adapter 16A - 250V~ - With 90º Outputs	81507	—	5

MULTIPLE OUTLET SOCKETS

	Ref.	Colour	Box (Un)
Triple Outlets Schuko Sockets 16A - 250V~ - **Lenght 1,5m**	81601	—	5
Triple Outlets Schuko Sockets 16A - 250V~ - **Lenght 3m**	81602	—	5
Triple Outlets Schuko Sockets 16A - 250V~ - **Lenght 5m**	81603	—	4
Six Outlets Schuko Sockets 16A - 250V~ - **Lenght 1,5m**	81701	—	5
Six Outlets Schuko Sockets 16A - 250V~ - **Lenght 3m**	81702	—	5
Six Outlets Schuko Sockets 16A - 250V~ - **Lenght 5m**	81703	—	5

EXTENSION CORDS

	Ref.	Colour	Box (Un)
Extension Cord 6A - 250V~ - **Lenght 3m**	81801	—	5
Extension Cord 6A - 250V~ - **Lenght 5m**	81802	—	5

Accessories for Electrical Installations

EXTENSION CORDS

	Ref.	Colour	Box (Un)
Extension Cord 16A - 250V~ - **Lenght 1,5m**	81803	—	5
Extension Cord 16A - 250V~ - **Lenght 3m**	81804	—	5
Extension Cord 16A - 250V~ - **Lenght 5m**	81805	—	5
Extension Cord 16A - 250V~ - **Lenght 10m**	81806	—	5
Extension Cord 16A - 250V~ - **Lenght 15m**	81807	—	5
Extension Cord for Irons 16A - 250V~ - **Lenght 2m**	81808	—	5

ACCESSORIES

	Ref.	Colour	Box (Un)
Automatic Relay for Blinds Control ▪ Rated Voltage: 230V~ – 50Hz. ▪ Breaking Capacity: 6A. ▪ Temporized. ▪ Connect to the Double Push-buttons and to Venetian Double Push-buttons.	81512	—	1
Relay for Blinds Control ▪ Rated Voltage: 230V~ – 50Hz. ▪ Breaking Capacity: 6A. ▪ No Temporized. ▪ Connect locally to Venetian Double Push-button (Ref. 21283). ▪ For the centralized command of the installation, connect remotely to a Venetian Double Push-button (Ref. 21283).	81511	—	1
Infrared Remote Control Transmitter for Blinds Control ▪ 4 groups of Buttons with 2 programmable functions. ▪ It works with 2 AAA batteries, not included.	81901	—	1
Infrared Remote Control Transmitter for Room Thermostat ▪ It works with 2 AAA batteries, not included.	81902	—	1
Infrared Remote Control Transmitter for Sound System ▪ For FM Sound Control Unit - Ref. 21370. ▪ It works with 2 AAA batteries, not included.	75985	—	1
Floor Temperature Sensor for Programmable Chrono-Thermostat and Room Thermostat with Infrared Remote Control **NEW** ▪ Length: 4m. ▪ Range: from 0 to 70°C. ▪ IP67	81950	—	1

Annex

		Page
WIRING DIAGRAMS	Mechanisms used in:	
	■ LOGUS 90 Series	
	■ Sirius 70 Series	166
	■ APOLO 5000 Series	
	■ WATERPROOF 48 Series	
	■ Surrounding Sound System	185
	2600 Series	
	3700 Series	198
	47 Series	
TECHNICAL DATA SHEETS	MEC 21 Series - Flush Mounting Mechanisms	164
	IP44 KIT	165
	Digital Clock Switches	170
	Dimmer / Two-way Switches	171
	Motion Detectors	172
	Temperature Controls	173
	Electrical Blinds Control	174
	Radio, Television and Satellite Sockets - MEC 21 and QUADRO 45	178
	Surrounding Sound System (Jazz Light Series)	180
	Dimensions:	
	■ LOGUS 90 Series Frames	190
	■ Sirius 70 Series Frames	192
	■ APOLO 5000 Series Frames	194
	■ WATERPROOF 48 Series	197
	■ 3700 Series	200
	Radio, Television and Satellite Sockets - 3700 Series and 47 Series	201
	DVI Series - Data, Voice and Image	202
	Cable-trunkings	204
	Modular Protections and Devices for Electrical Panels (MODUS 55 Series)	
	■ Miniature Circuit Breakers (MCBs)	208
	■ Residual Current Circuit Breakers (RCCBs)	210
	■ Over-voltage and Surge Protection Devices (SPDs)	211
	■ Staircase Time-Delay Switch	212
	■ Analogue Daily Clock Switch of 1 Channel	213
	■ Digital Daily / Weekly Clock Switch of 1 Channel	214
	■ Contactor 2 Pole	215
OTHER INFORMATIONS	Protection Indexes	216
	Product Certifications	217
	Reference Index	223
	EFAPEL, S.A.	236

MEC 21 SERIES - FLUSH MOUNTING MECHANISMS

■ **Mechanism Dimensions (mm):**

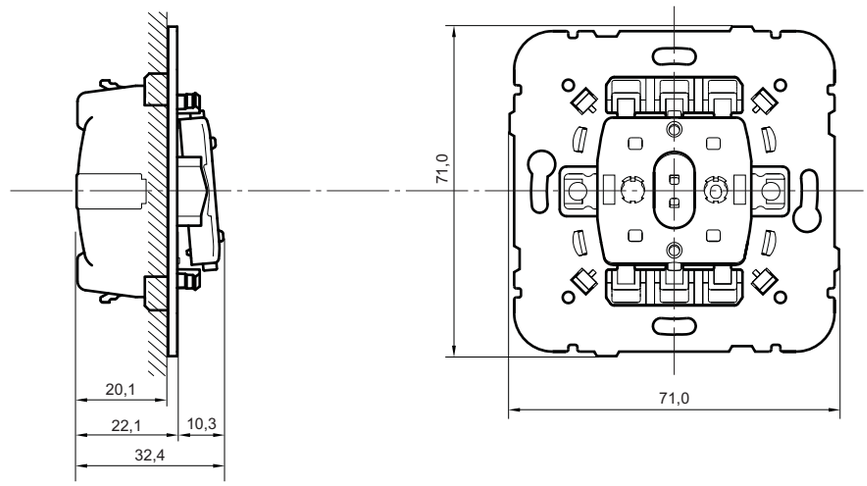

■ **Characteristics:**

■ Only **One Type of Mechanism** for all the Flush Mounting Devices (LOGUS 90, Sirius 70 and APOLO 5000 Series).

■ The **IP44 Kit** for Mechanisms of **Single Rocker** (Ref. 21981) and **Double Rockers** (Ref. 21982) assures the Protection Degree of **IP44** to the mechanisms of the MEC 21 Series.

■ **Mechanisms in technical thermoplastic.**

■ **Control Devices (Switches)**

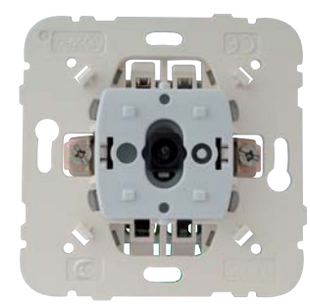

- 10AX - 250V~ - connections without screws terminals.
- 20AX - 250V~ - connections with screws terminals.
- In accordance with the EN 60669-1 Standard.

■ **Sockets Outlets**

■ Earth Socket (Schuko and French Types):
- 16A - 250V~.
- Connections with screws or **screwless terminals.**
- In accordance with the IEC 60884-1Standard; DIN VDE 0620-1 (Schuko) and NF UC 61-314 (French).

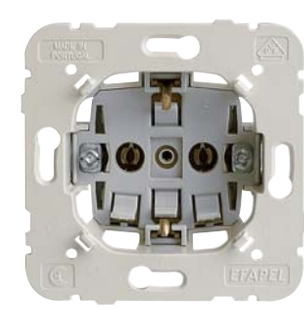

■ Earth Socket (British Type):
- 13A - 250V~.
- With and without Pilot Lamp.
- In accordance with the BS 1363-2 Standard.

■ Earth Socket (Euro-USA Type):
- 15A - 127V~/16A - 250V~.
- In accordance with the ANSI; NEMA ND-6 (Figure 5-15) and IEC 60884-1 Standards.

■ Earth Socket (Saudi Type):
- 15A - 127V~.
- In accordance with the SASO 2204 Standard.

IP44 PROTECTION for FLUSH MOUNTING DEVICES

IP44 KIT

For all Switch Mechanisms of one or two Rockers

LOGUS90 sirius70 APOLO 5000

Single Rocker
Ref. 21981

Double Rockers
Ref. 21982

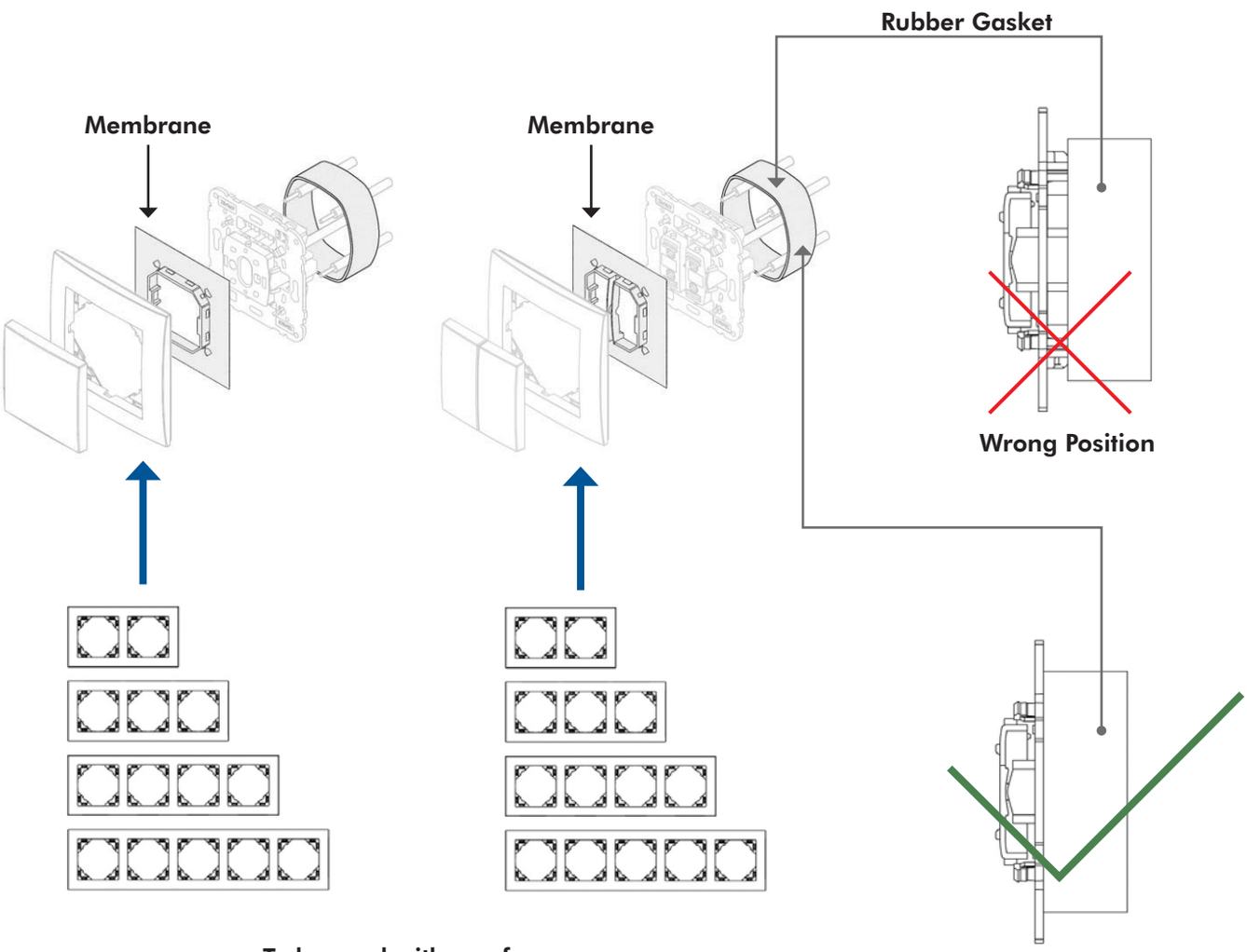

To be used with any frame
(Single, Double, Tree, Four and Five Gangs)

■ **Installation Instructions:**

1. Put the Rubber Gasket around the Mechanism and make the connections.
2. Attach the Mechanism to the Wall Box.
3. Put the Plastic Membrane over the Mechanism.
4. Finalize the Installation adding the Frame and the Rocker(s).

MECHANISMS USED IN LOGUS 90, SIRIUS 70, APOLO 5000 AND WATERPROOF 48 SERIES

SINGLE POLE SWITCH

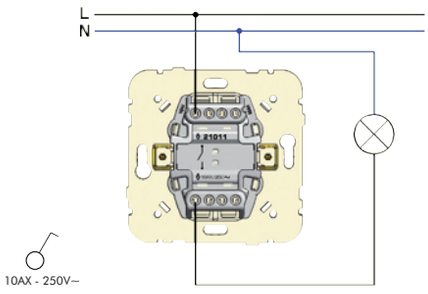

SINGLE POLE SWITCH WITH ORIENTING LIGHT

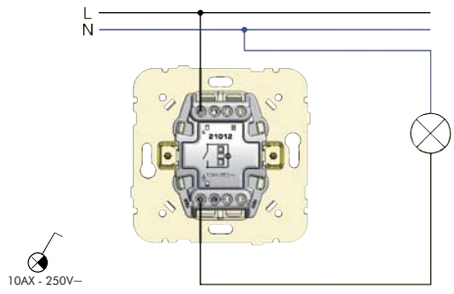

SINGLE POLE SWITCH WITH PILOT LAMP

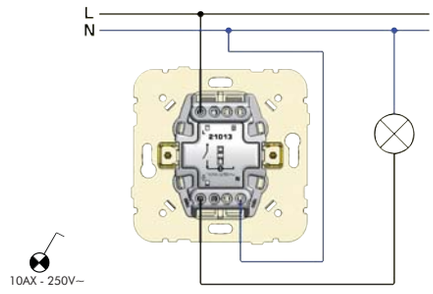

TWO-POLE SWITCH

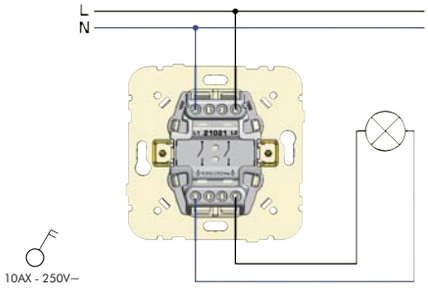

TWO-POLE SWITCH WITH PILOT LAMP

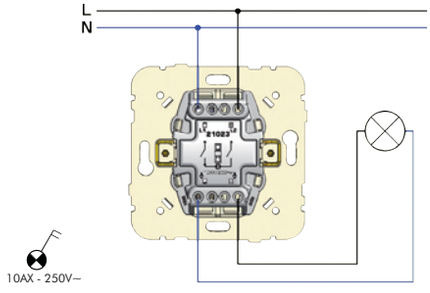

TWO-POLE SWITCH WITH PILOT LAMP 20A

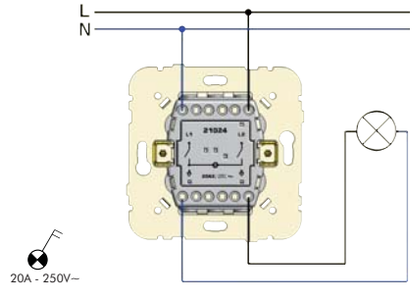

CARD-SYSTEM SWITCH

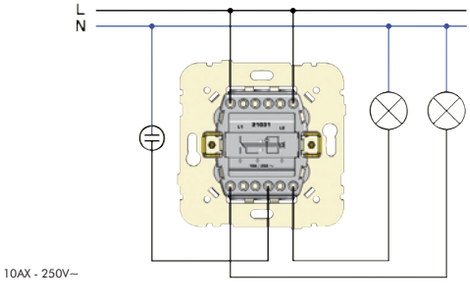

TWO CIRCUITS SWITCH

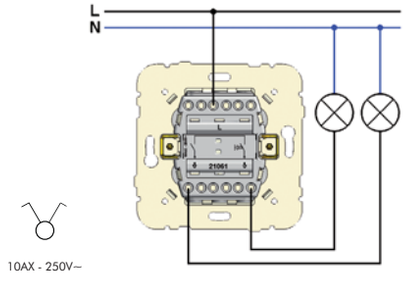

THREE CIRCUITS SWITCH

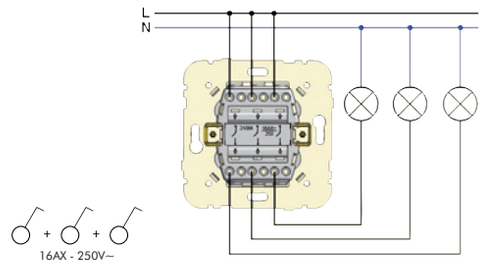

TWO-WAY SWITCH

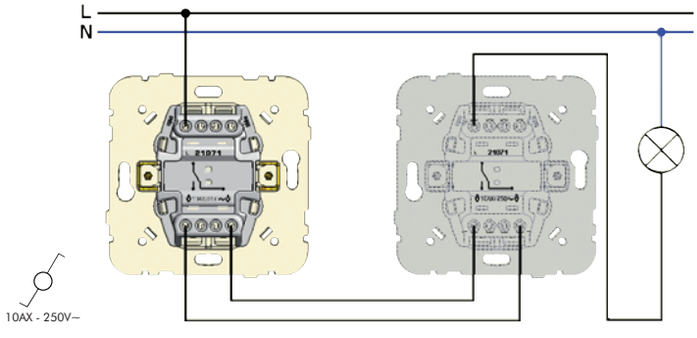

TWO-WAY SWITCH WITH ORIENTING LIGHT

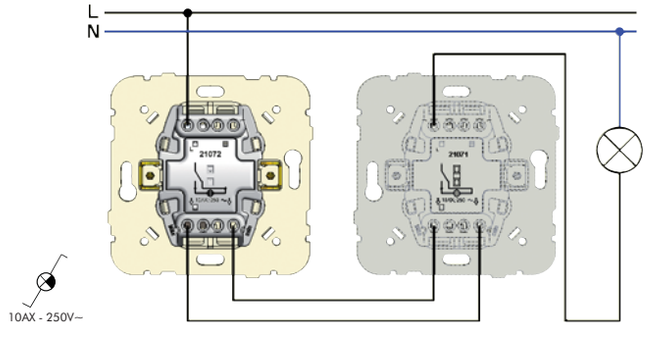

MECHANISMS USED IN LOGUS 90, SIRIUS 70, APOLO 5000 AND WATERPROOF 48 SERIES

TWO-WAY SWITCH WITH PILOT LAMP

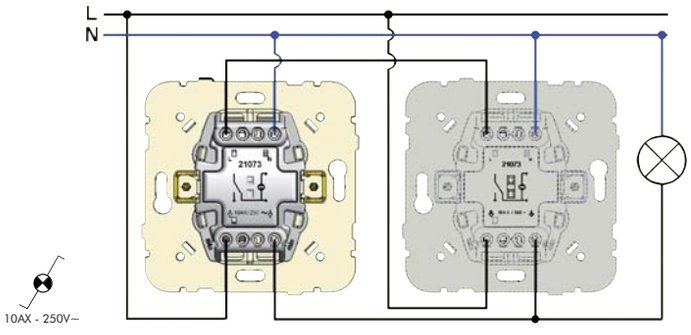

DOUBLE TWO-WAY SWITCH

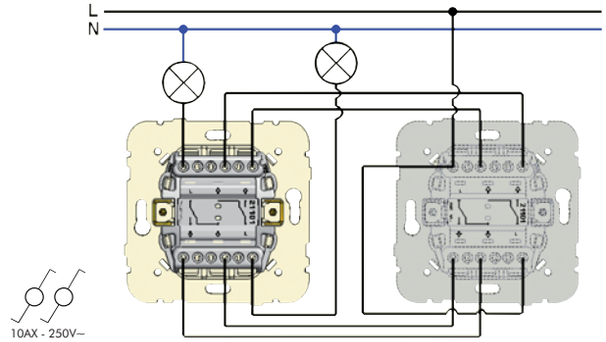

INTERMEDIATE SWITCH

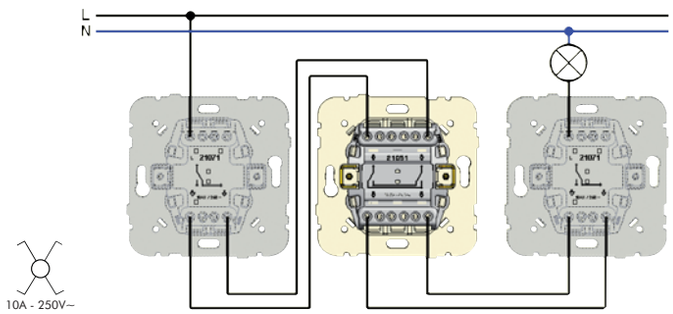

INTERMEDIATE SWITCH WITH ORIENTING LIGHT

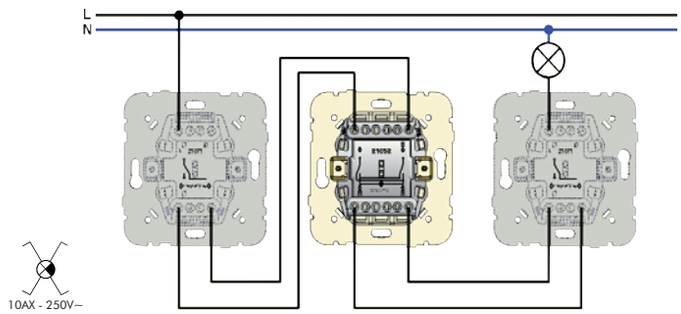

Button PUSH-BUTTON

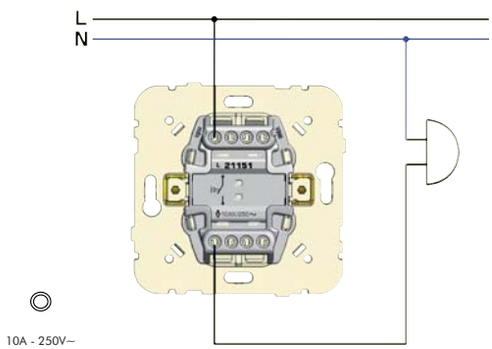

Button PUSH-BUTTON (NO+NC) NEW

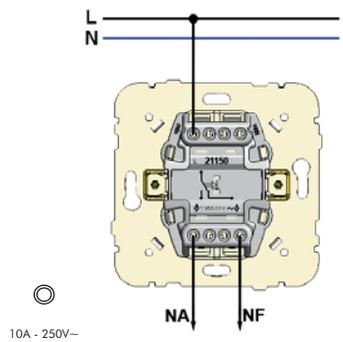

Button PUSH-BUTTON WITH ORIENTING LIGHT (250V)

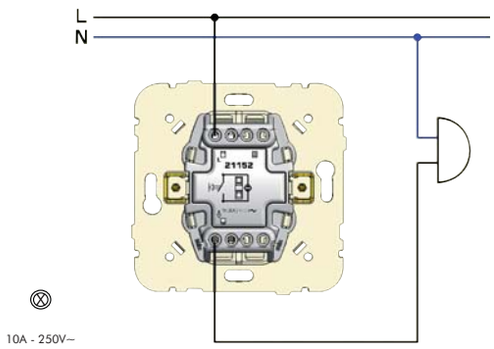

Button PUSH-BUTTON WITH ORIENTING LIGHT (12V)

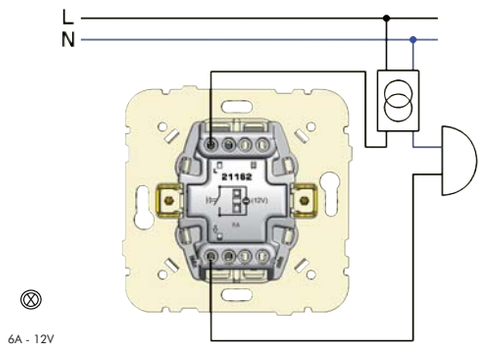

MECHANISMS USED IN LOGUS 90, SIRIUS 70, APOLO 5000 AND WATERPROOF 48 SERIES

BUTTON PUSH-BUTTON WITH INDEPENDENT PILOT LAMP

NEW

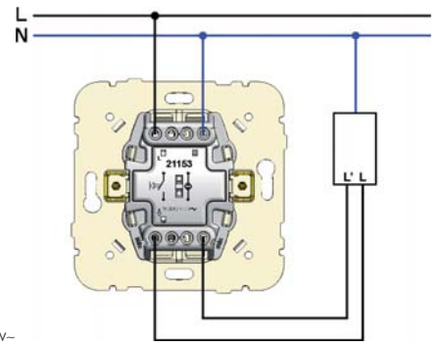

10A - 250V~

ROCKER PUSH-BUTTON WITH IDENTIFICATION (250V)

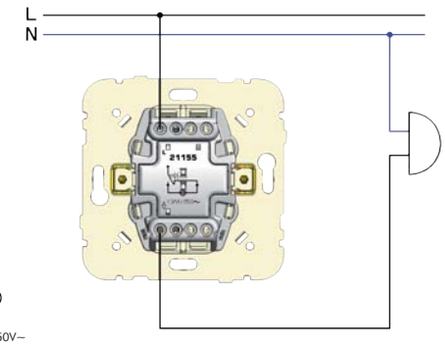

10A - 250V~

ROCKER PUSH-BUTTON WITH IDENTIFICATION (12V)

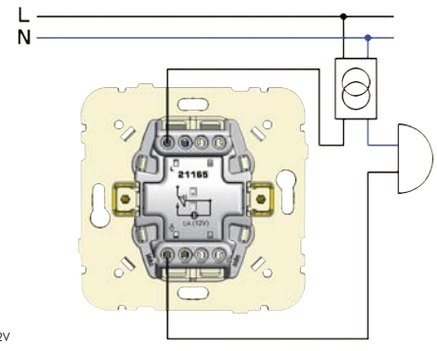

6A - 12V

DOUBLE PUSH-BUTTON

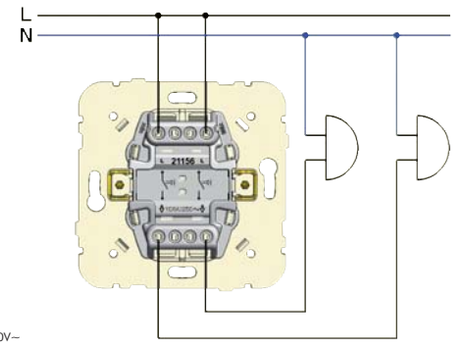

10A - 250V~

DOUBLE PUSH-BUTTON (2NO+2NC)

NEW

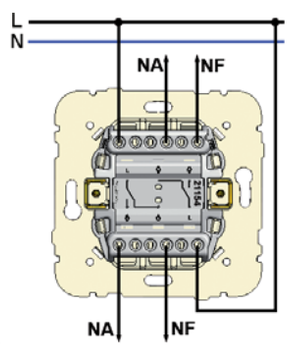

10A - 250V~

ROCKER PUSH-BUTTON/ TWO-WAY SWITCH

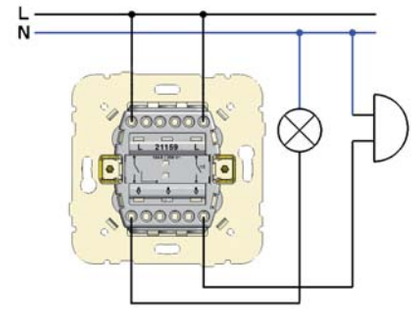

10A - 250V~

VENETIAN SWITCH
VENETIAN SWITCH WITH MECHANICAL BLOCKAGE

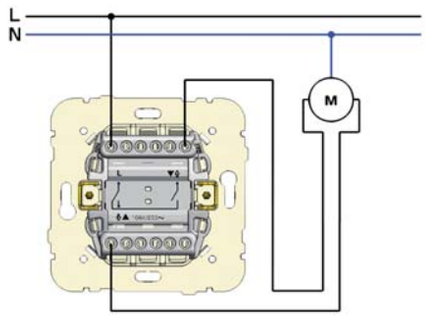

10A - 250V~

VENETIAN DOUBLE PUSH-BUTTON

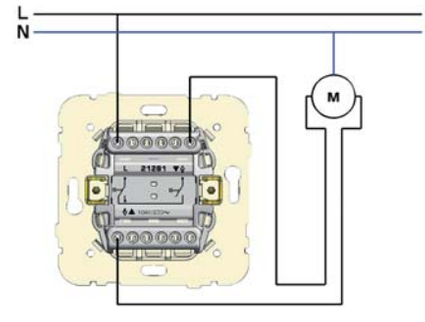

10A - 250V~

MECHANISMS USED IN LOGUS 90, SIRIUS 70, APOLO 5000 AND WATERPROOF 48 SERIES

VENETIAN DOUBLE PUSH-BUTTON FOR MULTIPLE POINT BLINDS CONTROL (Control from 1 point)

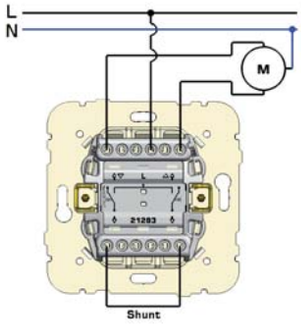

10A - 250V~

VENETIAN DOUBLE PUSH-BUTTON FOR MULTIPLE POINT BLINDS CONTROL (Control from 2 or several points)

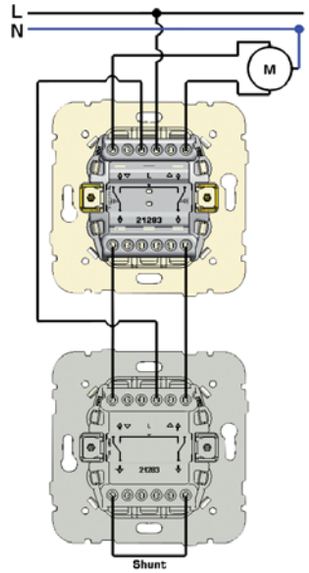

10A - 250V~

ROTARY TWO-WAY SWITCH 16A ROTARY VENETIAN PUSH-BUTTON

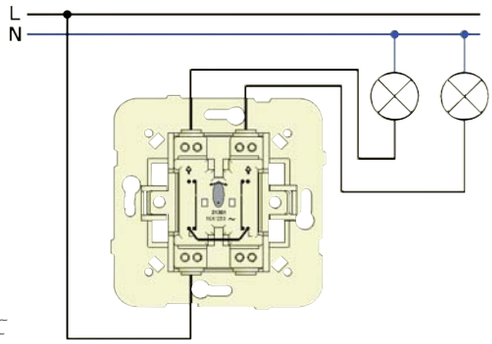

16AX - 250V~
16A - 250V~

ROTARY SWITCH 16A PULL-CORD PUSH-BUTTON 10A

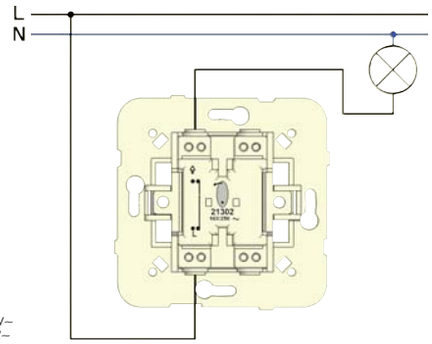

16AX - 250V~
10A - 250V~

KEY-LOCK TWO-WAY SWITCH KEY-LOCK PUSH-BUTTON

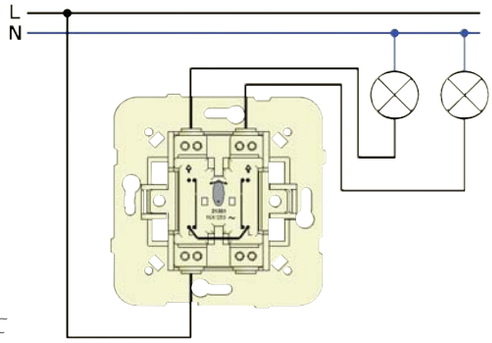

10AX - 250V~
10A - 250V~

PULL-CORD TWO-WAY SWITCH

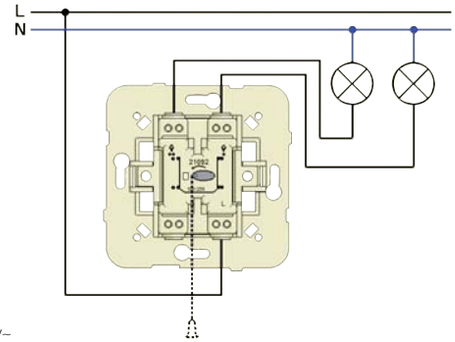

10A - 250V~

DIGITAL CLOCK SWITCHES

LOGUS90 sirius70 APOLO 5000 QUADRO 45

■ **Description**: The Digital Clock Switch is a device designed to control any electrical installation. Includes pulse programming from 1 to 59 seconds and up to 32 block memory spaces. Automatic Winter-Summer official time adjustment.

■ **Operating Instructions:**

- **"C1" Button** - Manual Operation Channel 1, Access and change the Menu Items.
- **"C2" Button** - Manual Operation Channel 2 (model only 2 Channels), Access and change the Menu Items.
- **"OK/Menu" Button** - Access the Menu Items, Confirms the selection.
- **"STANDBY" Button** - Suspension of Programming.
- **"C" Button** - Move back in Menu Items, Permanent override.

■ **Characteristics:**

Characteristics	One Circuit Digital Clock Switch (Ref. 21046/45046 S)	Two Circuits Digital Clock Switch (Ref. 21047/45047 S)
Rated Voltage	230V~ - 50Hz	230V~ - 50Hz
Power Consumption	1W	1W
Breaking Capacity	6A	6A + 6A
Programming Accuracy	1 Sec.	1 Sec.
Operating Accuracy	< 1 Sec./day	< 1 Sec./day
Memory Capacity	32 Blocks	32 Blocks
Output Functions	ON - OFF - Pulse (from 1 to 59 Sec)	ON - OFF - Pulse (from 1 to 59 Sec)
Output Contacts	NO and NC	2NO and 2NC
Blockade Function	√	√
Battery Back Up	√	√

Note:
NO – Normally open.
NC – Normally closed.

■ **Wiring Diagram:**

Ref. 21047 / 45047 S

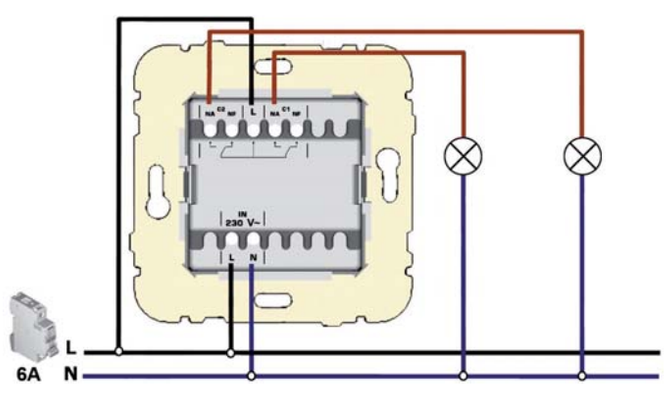

EFAPEL

DIMMER / TWO-WAY SWITCHES

LOGUS90 | sirius70 | APOLO 5000

■ **Description**: Allows to control the luminuous intensity of a lamp or a group of lamps.

■ **Operating Instructions:**

- Rotate the potentiometer to adjust the luminuous intensity of the lamp(s).
- Push the knob gently to work as a two-way switch.
- Voltage Trailing edge control (Ref. 21212).

■ **Characteristics:**

Characteristics	Dimmer / Two-way Switch of 500W (Ref. 21211)	Electronic Dimmer / Two-way Switch of 320W (Ref. 21212)
Maximum Load	500W	320W
Minimum Load	40W	5W
Two-way Switch Function	√	√
Minimum Intensity Adjustment	√	*
Fuse	√	—
Incandescent Lamps	√	√
Halogen Lamps, 230V~	√	√
Halogen Lamps with Ferromagnetic Transformer	√	—
Halogen Lamps with Electronic Transformer	—	√

Note:
* - Auto Adjust

■ **Wiring Diagram:**

Use as a Dimmer Switch

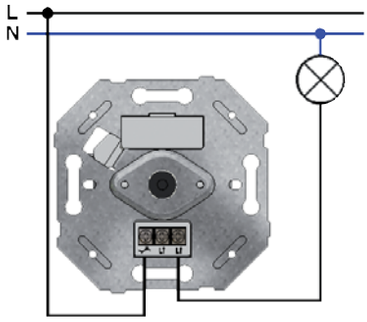

Use as a Dimmer Switch and a Two-way Switch

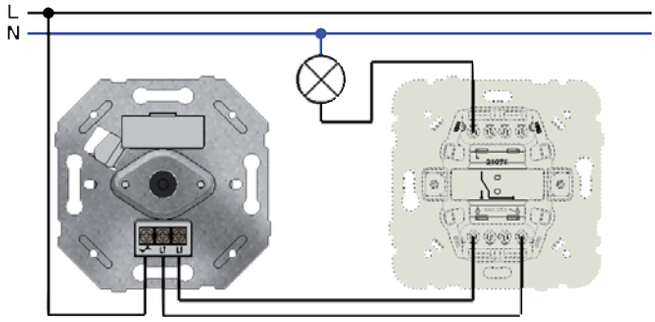

MOTION DETECTORS

LOGUS90 sirius70 APOLO 5000 QUADRO 45

■ **Description**: Controls the connection of electrical circuit according to the detection of motion and the ambient light. **Compatible with any electric load**.

■ **Operating Instructions:**

– Remove the cover of the mechanism to reach the potentiometers of the adjustments of time and sensibility.

Operating Time Regulation **Light Sensibility Regulation**

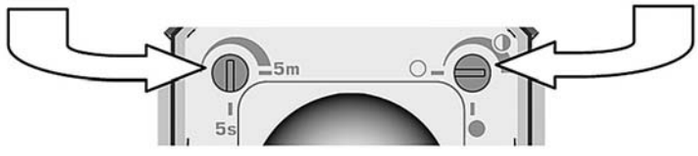

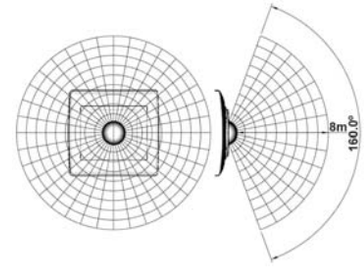

■ **Characteristics:**

Characteristics	Motion Detector of 1000W (Ref. 21401/45401 S)	Motion Detector of 400W (Ref. 21402/45402 S)
Rated Voltage	230V~ - 50/60Hz	230V~ - 50/60Hz
Power Consumption	1W	1W
Maximum Load	1000W	400W
Light Sensibility Regulation	√	√
Operating Time Regulation	from 5 Sec. to 5 min.	from 5 Sec. to 5 min.
Range of Detection	8m	8m
Detection Angle	160°	160°
Relay Output	NO and NC	NO and NC

Note:
NO – Normally open.
NC – Normally closed.

■ **Wiring Diagram:**

NEW

Motion Detector with Voltage Free Inverter Contact (NO+NC).

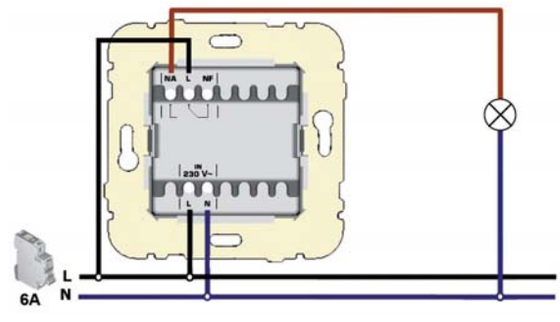

EFAPEL

TEMPERATURE CONTROLS

LOGUS90 sirius70 APOLO 5000 QUADRO 45

PROGRAMMABLE CHRONO-THERMOSTAT

- **Description**: It allows to control manually or automatically the heating or air conditioning systems according to a daily / weekly schedule and according with pre-programmed temperatures. It is possible to connect a floor temperature sensor and automatically detect its connection.

- **Operating Instructions:**

– "⮟" **Button** – Reduce Values; Menu Items Navigation; Minimum Temperature.
– "⮝" **Button** – Increment Values; Menu Items Navigation; Maximum Temperature.
– "**C**" **Button** – ON/OFF and Stop Action.
– "**OK**" **Button** – OK and Menu Items.

ROOM THERMOSTAT WITH INFRARED REMOTE CONTROL

- **Description**: It allows to control the heating or air conditioning systems according to the chosen temperature. It is possible to connect a floor temperature sensor and automatically detect its connection.

- **Operating Instructions:**

– "⮟" **Button** – Temperature Reduction; Reduce Values.
– "⮝" **Button** – Temperature Increasing; Increment Values.
– "**TIMER**" **Button** – ON/OFF and Timer.

■ **Characteristics:**

Characteristics	**Programmable Chrono-Thermostat** (Ref. 21232/45232 S)	**Room Thermostat with Infrared Remote Control** (Ref. 21233/45233 S)
Rated Voltage	230V~ - 50Hz	230V~ - 50Hz
Power Consumption	1W	1W
Breaking Capacity	16A	16A
Adjustable Timer	√	—
Sensibility	1°C	1°C
Room Temperature Read-out	0 to 35°C	0 to 35°C
Timer	—	15 to 90 min
Programming of the holidays period	√	—
Infrared Remote Control	—	√
Voltage Free Contacts	√	√
Battery Back up	≈ 3h	≈ 3h

■ **Wiring Diagram:**

NEW

With Floor Temperature Sensor detection and reading and 16A of breaking capacity

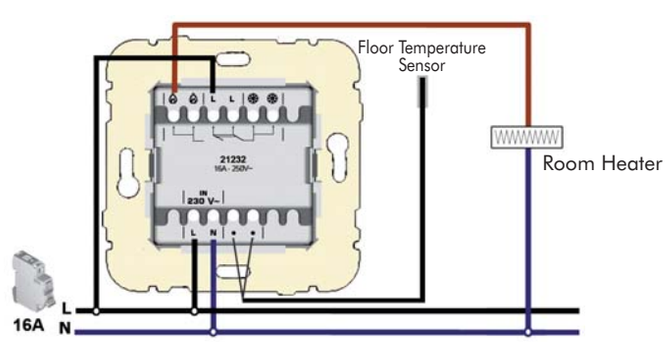

ELECTRICAL BLINDS CONTROL MODULES

LOGUS90 sirius70 APOLO 5000 QUADRO 45

1. BLINDS CONTROL MODULES

GENERAL BLINDS CONTROL MODULE WITH INFRARED REMOTE CONTROL

■ **Description**: This module allows the individual or the general control of a blind or a group of blinds, in manual or automatic way, in accordance with a pre-programmed schedule or with the environmental conditions defined or measured by associated sensors (Wind, Sun, etc). The remote control is possible through an IR transmitter.

■ **Operating Instructions:**

- "⮟" **Button** – Blinds Down / Down Program
- "⮝" **Button** – Blinds Up / Up Program
- "**PROG**" **Button** – Program
- **"PROG + STANDBY" Button** – Delete the existing program
- **"STANDBY" Button** – Stop the existing program

LOCAL BLINDS CONTROL MODULE WITH INFRARED REMOTE CONTROL

■ **Description**: It allows the individual control of a blind. The remote control is possible through an IR transmitter.

■ **Operating Instructions:**

- "⮟" **Button** – Blinds Down / Down Program
- "⮝" **Button** – Blinds Up / Up Program

■ **Characteristics:**

Characteristics	General Blinds Controle Module with Infrared Remote Control (Ref. 21311/45311 S)	Local Blinds Controle Module with Infrared Remote Control (Ref. 21312/45312 S)
Rated Voltage	230V~ - 50Hz	230V~ - 50Hz
Power Consumption	1W	1W
Maximum Load	6A (1380W, Cosϕ =1)	6A (1380W, Cosϕ =1)
Programming	2 functions (Up and Down)	—
Battery Back up	24h	24h
Functions	Standby	—
Infrared Remote Control	√	√

ELECTRICAL BLINDS CONTROL MODULES

LOGUS90 sirius70 APOLO 5000 QUADRO 45

1.1 **Wiring Diagram** for a **Blinds Centralized Installation** by using **Blinds Control Modules:**

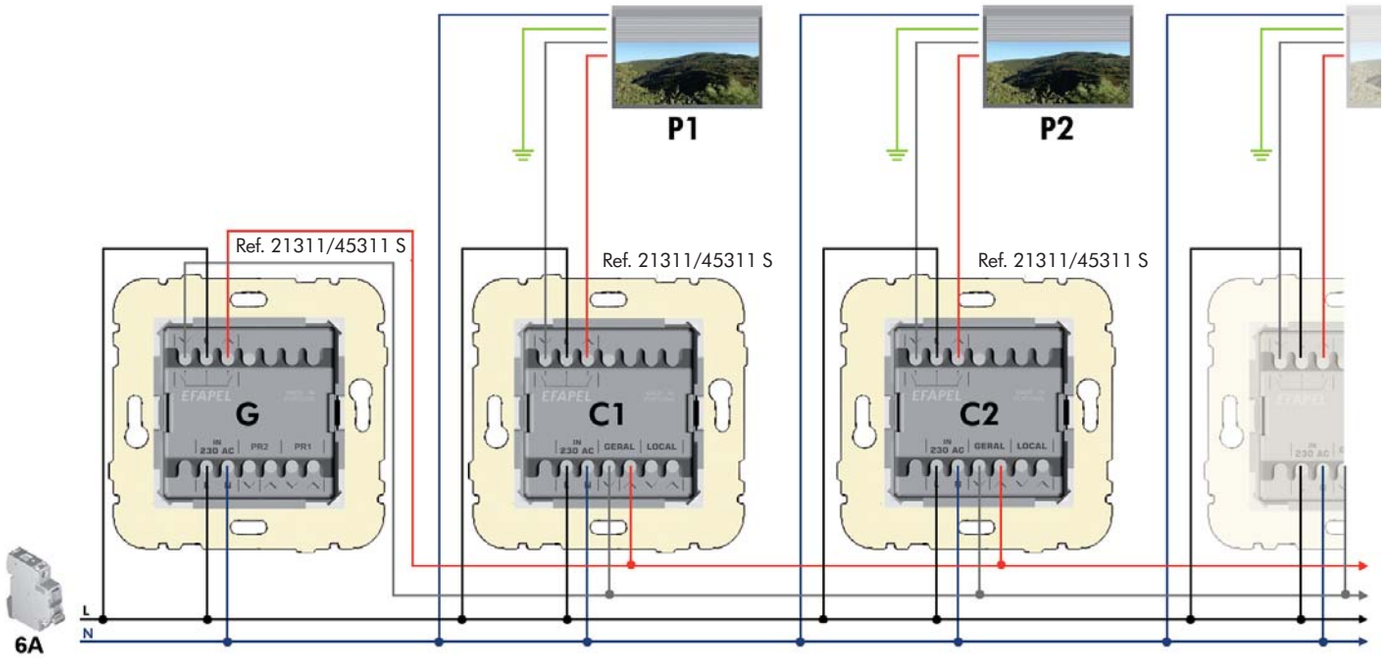

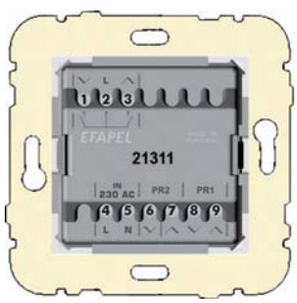

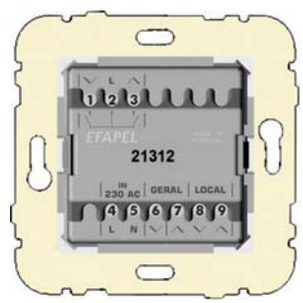

Terminal	FUNCTION - General Blinds Controle Module with Infrared Remote Control (Ref. 21311/45311 S)	FUNCTION - Local Blinds Controle Module with Infrared Remote Control (Ref. 21312/45312 S)
1	General Output - Down	General Output - Down
2	Blinds Power Supply (line)	Blinds Power Supply (line)
3	General Output - Up	General Output - Up
4	Power Suply (line)	Power Suply (line)
5	Power Suply (neutral)	Power Suply (neutral)
6	Signal input priority 2 (230V~) - Down	Signal input from General Control - Down
7	Signal input priority 2 (230V~) - Up	Signal input from General Control - Up
8	Signal input priority 1 (230V~) - Down	Signal input from the Local Control - Down
9	Signal input priority 1 (230V~) - Up	Signal input from the Local Control - Up

ELECTRICAL BLINDS CONTROL MODULES

LOGUS90 sirius70 APOLO 5000 QUADRO 45

2. AUTOMATIC RELAY FOR BLINDS CONTROL

■ **Description**: It allows the individual and general control of a group of blinds. It could be installed in the standard wall boxes, in the derivation boxes near the blinds or in deep wall boxes and behind the wiring devices installed in the same box.

■ **Characteristics:**

Rated Voltage	230V~ - 50Hz
Power Consumption	1W
Maximum Load	6A (1380W, cosϕ =1)
Time of Opening and Closing	90 Sec.
Electrical Blockage	√
Dimensions	48mm x 36,3mm x 24mm

2.1 **Wiring Diagram** for a **Blinds Centralized Installation** by using **Automatic Relay for Blinds Control (Ref. 81512):**

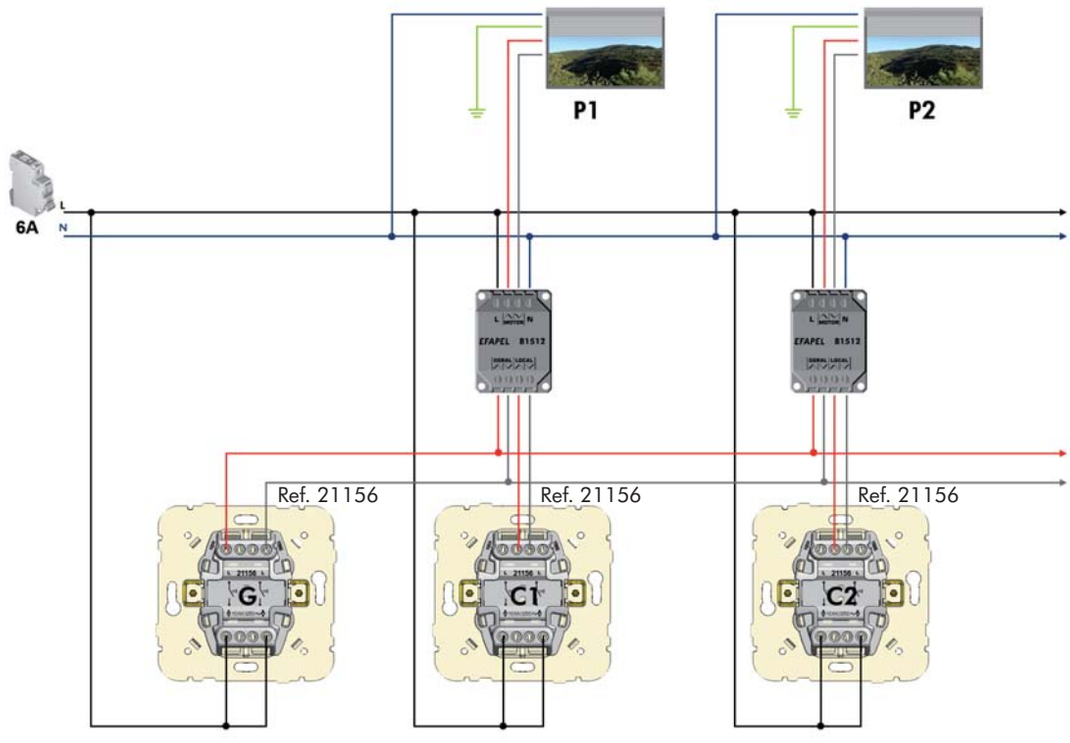

Note: The protection against two simultaneous orders of open or close applied in the same device or different devices, is guaranteed by the software of the relay.

Terminal	FUNCTION - Automatic Relay for Blinds Control (Ref. 81512)
⮟	Output for Motor - Down
⮝	Output for Motor - Up
L	Power Suply (Phase)
N	Power Suply (Neutral)
⮟	Signal input for the General Control - Down
⮝	Signal input for the General Control - Up
⮟	Signal input for the Local Control - Down
⮝	Signal input for the Local Control - Up

EFAPEL

ELECTRICAL BLINDS CONTROL MODULES

LOGUS90 sirius70 APOLO 5000 QUADRO 45

3. RELAY FOR BLINDS CONTROL

■ **Description**: It allows the individual and general control of a group of blinds. It could be installed in the standard wall boxes, in the derivation boxes near the blinds or in deep wall boxes and behind the wiring devices installed in the same box.

■ **Characteristics:**

Rated Voltage	230V~ - 50Hz
Power Consumption	1W
Maximum Load	6A (1380W, cosϕ =1)
Time of Open and Close	—
Electrical Blockage	X*
Dimensions	48mm x 36,3mm x 24mm

Note:
* - The electrical blockage (protection against two simultaneous orders) is guaranteed by the association of the Relay for Blinds Control and the Venetian Double Push-button for multiple Points Blinds Control (Ref. 21283).

2.1 **Wiring Diagram** for a **Blinds Centralized Installation** by using **Relay for Blinds Control (Ref. 81511):**

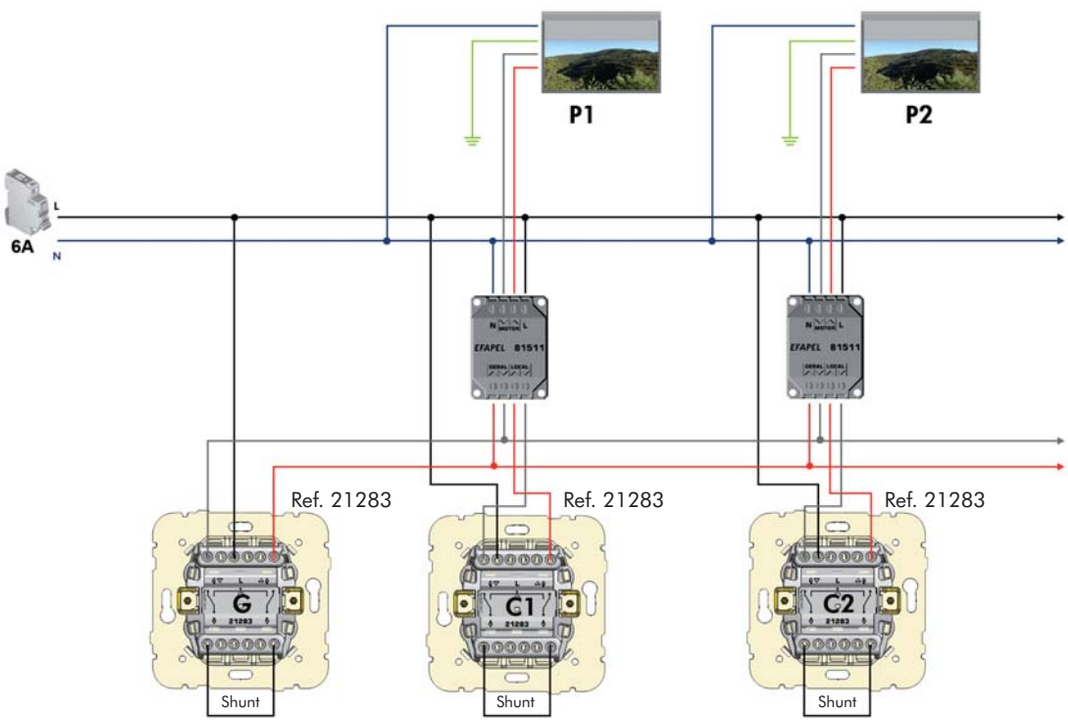

Notes:
- It is required to hold down the Buttons in order to open / close entirely the blinds.
- The protection against two simultaneous opening and close orders in the same device or different devices is guaranteed by the combination of the mechanism (Ref. 21283) and the relay (Ref. 81511). For this reason, this relay works only with the mentioned mechanism.

Terminal	FUNCTION - Relay for Blinds Control (Ref. 81511)
⮟	Output for Motor - Down
⮝	Output for Motor - Up
L	Power Suply (Phase)
N	Power Suply (Neutral)
⮟	Signal input for the General Control - Down
⮝	Signal input for the General Control - Up
⮟	Signal input for the Local Control - Down
⮝	Signal input for the Local Control - Up

RADIO, TELEVISION AND SATELLITE SOCKETS

LOGUS90 | sirius70 | APOLO 5000

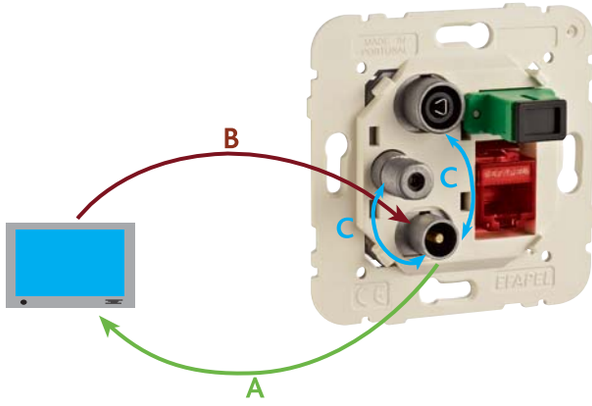

A	- Insertion Losses
B	- Return Losses
C	- Isolation between Outputs

■ **SOCKETS TYPE:**

Type		Ref.	RADIO	TV	SAT	FO SC-APC	RJ45 Cat. 6
STAR CONNECTION	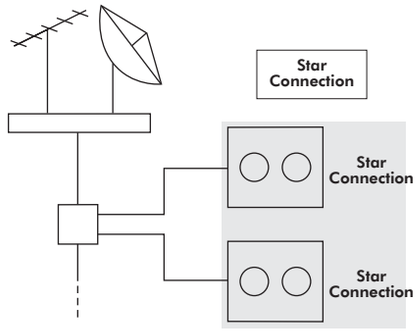	21543	●	●	●		
		21544	●	●	●		●
		21545	●	●	●	●	●
		21546	●	●	●		● ●
		21533	●	●			
		21534	●	●			●
		21535	●	●		●	●
SERIES CONNECTION	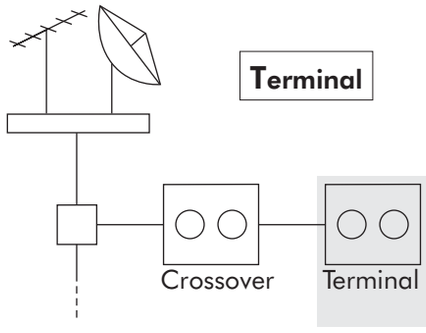	21554	●	●			
		21555	●	●	●		
	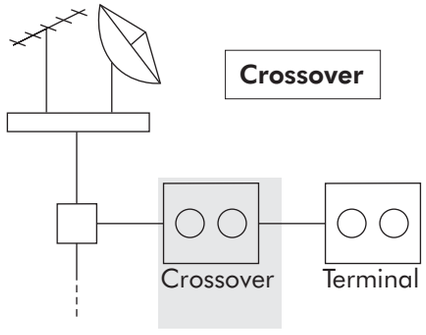	21564	●	●			
		21565	●	●	●		

EFAPEL

RADIO, TELEVISION AND SATELLITE SOCKETS

LOGUS90 sirius70 APOLO 5000

■ R - TV - SAT Sockets (Impedance of 75 Ohm)

LINEAL	Outputs		Insertion Losses (dB)										Insertion Losses dB	Isolation between Outputs dB	Return Losses dB	DC Current Passage mA (DC)
	Connector / Outpts		Return	BI	Sub Band	FM	S. Low	BIII /DAB	S. High Hyper	UHF	SAT					
Ref.			4-47 MHz	47-68 MHz	68-80 MHz	84-108 MHz	112-174 MHz	174-230 MHz	230-446 MHz	470-862 MHz	950-2150 MHz	2150-2400 MHz				
Star 21543 21544 21545 21546 45543 S NQ 2b	IEC Male	TV	<1	<1	<1	<1	<1	<1	<1	<1	--	--	--	>20	>18	--
	IEC Female	R	<20	<20	<20	<20	<20	<20	<20	<20	--	--				--
	F Female	SAT	--	--	--	--	--	--	--	--	<3	<3				(SAT-IN) 500mA
Terminal 21555 45555 S NQ 2b	IEC Male	TV	$5^{\pm1}$	$5^{\pm1}$	$5^{\pm1}$	$5^{\pm1}$	$5^{\pm1}$	$5^{\pm1}$	$5^{\pm1}$	$5^{\pm1}$	--	--	--	>12	>18	--
	IEC Female	R	<20	<20	<20	<20	<20	<20	<20	<20	--	--				--
	F Female	SAT	--	--	--	--	--	--	--	--	$5^{\pm1}$	$5^{\pm1}$				(SAT-IN) 500mA
Crossover 21565 45565 S NQ 2b	IEC Male	TV	$9^{\pm1}$	$9^{\pm1}$	$9^{\pm1}$	$9^{\pm1}$	$9^{\pm1}$	$9^{\pm1}$	$9^{\pm1}$	$9^{\pm1}$	--	--	<3	>12	>18	--
	IEC Female	R	$18^{\pm1}$	$18^{\pm1}$	$18^{\pm1}$	$18^{\pm1}$	$18^{\pm1}$	$18^{\pm1}$	$18^{\pm1}$	$18^{\pm1}$	--	--				--
	F Female	SAT	--	--	--	--	--	--	--	--	$9^{\pm1}$	$9^{\pm1}$				(SAT-IN) 500mA

■ R - TV Sockets (Impedance of 75 Ohm)

EQUALIZED	Outputs		Insertion Losses (dB)										Insertion Losses dB	Isolation between Outputs dB	Return Losses dB
	Connector / Outpts		Return	BI	Sub Band	FM	S. Low	BIII /DAB	S. High Hyper	UHF	SAT				
Ref.			4-47 MHz	47-68 MHz	68-80 MHz	84-108 MHz	112-174 MHz	174-230 MHz	230-446 MHz	470-862 MHz	950-2150 MHz	2150-2400 MHz			
Star 21533 21534 21535 45533 S NQ 2a	IEC Male	TV	<1	<1	<1	--	<1	<1	<1	<1	--	--	--	>20	--
	IEC Female	R	--	--	--	$2^{\pm0.3}$	--	--	--	--	--	--			
Terminal 21554 45554 S NQ 2a	IEC Male	TV	$5^{\pm1}$	$5^{\pm1}$	$5^{\pm1}$	--	$5^{\pm1}$	$5^{\pm1}$	$5^{\pm1}$	$5^{\pm1}$	--	--	--	>20	>18
	IEC Female	R	--	--	--	$6^{\pm1}$	--	--	--	--	--	--			
Crossover 21564 45564 S NQ 2a	IEC Male	TV	$9^{\pm1}$	$9^{\pm1}$	$9^{\pm1}$	--	$9^{\pm1}$	$9^{\pm1}$	$9^{\pm1}$	$9^{\pm1}$	--	--	$1^{\pm0.5}$	>20	>18
	IEC Female	R	--	--	--	$9^{\pm1}$	--	--	--	--	--	--			

1. POWER SUPPLIES

■ **Description:** The Power Supplies are intended to transform the value of network voltage, rectify it and supply the Sound Centrals and Controls Units with a voltage of 15V ⎓.

1.1 Power Supply 15V⎓ 30W for DIN Rail Mounting

Characteristics

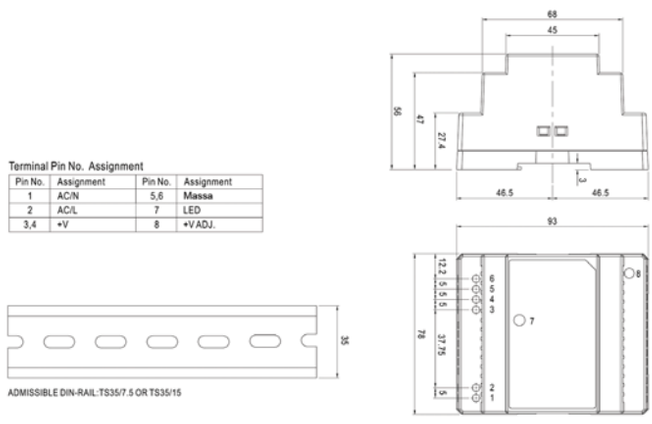

Terminal Pin No. Assignment

Pin No.	Assignment	Pin No.	Assignment
1	AC/N	5,6	Massa
2	AC/L	7	LED
3,4	+V	8	+V ADJ.

	Parameter	Unit	Minimum	Provided	Maximum	Obs.
Input	Voltage	V~	85	230	264	
	Frequence	Hz	47 ~ 63			
	Rated Current	A	0,48			At 230V~
	Efficiency	%	83			
Output	Voltage	V⎓	15			
	Current	A	2,0			(Max.)
	Power	W	30			

Installation Notes

1. It can be installed in the electrical panel or in a secondary or a floor electrical panel;
2. The pipeline to supply electrical energy to the sound system must be independent of others;
3. Possible to supply energy to 10 Stereo Channel Sound Control Units and 20 Mono Channel Sound Control Units and 1 Module Sound Central Unit.

1.2 Power Supply 15V⎓ 12W for Installation in Hollow Ceilings

Characteristics

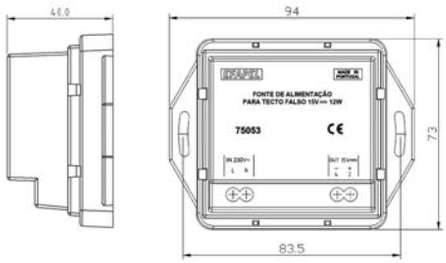

Terminal	Parameter	
L	230V~ AC Line IN	
N	230V~ AC Neutral IN	
2	15V⎓	(+) Out
4	Common	(-) Out

	Parameter	Unit	Minimum	Provided	Maximum	Obs.
Input	Voltage	V~	85	230	264	
	Frequence	Hz	47 ~ 63			
	Rated Current	A	0,174			230V~
	Efficiency	%	85			
Output	Voltage	V⎓	15			
	Current	A	800			(Máx.)
	Power	W	12			

Installation Notes

1. Fits in the back of the 5" loudspeakers installed in a Flush Mounting Deep Ceiling Box for 5" Loudspeakers (Ref. 75984);
2. The pipeline to supply electrical energy to the sound system must be independent of others;
3. Possible to supply energy to 4 Stereo Channel Sound Control Units and 1 Module Sound Central Unit, or 8 Mono Channel Sound Control Units and 1 Module Sound Central Unit.

SURROUNDING SOUND SYSTEM

LOGUS90 sirius70 APOLO 5000 QUADRO 45

1.3 Power Supply Module 15V⎓ 5W

Characteristics

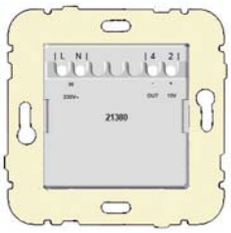

Terminal	Parameter	
L	230V~ AC Line IN	
N	230V~ AC Neutral IN	
2	15V⎓	(+) Out
4	Common	(-) Out

	Parameter	Unit	Minimum	Provided	Maximum	Obs.
Input	Voltage	V~	100	230	264	
	Frequence	Hz	47 ~ 63			
	Rated Current	A	0,065			At 230V~
	Efficiency	%	85			
Output	Voltage	V⎓	15			
	Current	mA	300			(Máx.)
	Power	W	5			

Installation Notes

1. It could be installed in mechanisms boxes* (Ref. 21380) or in cable-trunking adapters of the QUADRO 45 Series (Ref. 45380 S);
2. The pipeline to supply electrical energy to the sound system must be independent of others;
3. Each Power Supply can feed energy to 1 Stereo or Mono Sound Control.

NOTE: * - Use preferable deep mechanism boxes.

2. MODULAR SOUND CENTRAL UNITS

■ **Description:** The main function of the Modular Sound Central Units is to receive an external source of sound and then transform and send it to the Sound Control Units installed in the entire sound system installation.

2.1 One Stereo Channel Modular Sound Central with FM Tuner

Characteristics

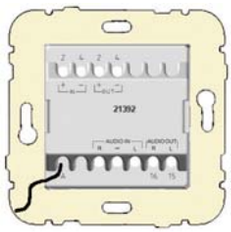

Connections			Characteristics					
Terminal		Parameter	Parameter	Un.	Min.	Prov.	Max.	Obs.
IN	+ (2)	Power Supply (+) 15V⎓	POWER SUPPLY					
	- (4)	Common (-)	Voltage	V⎓	13,5	15,0	16,5	—
OUT	+ (2)	Power Supply of Command 15V⎓	Consumption	mA	1,0	—	70	Standby/On
	- (4)		AUDIO (AUX)					
AUDIO IN	R	Sound Input Right Channel	Input Sensitivity	Vrms	—	1,0	—	Vout = 1,2V
	-	Sound Input Common	Input Impedance	KΩ	—	30,0	—	—
	L	Sound Input Left Channel	Frequency Response	Hz	20	—	<20k	-3dB
AUDIO OUT	R	Sound Output Right Channel	FM TUNER					
	L	Sound Output Left Channel	Output Level FM	Vrms	—	0,7	—	75KHz
A		Antenna	Frequency Range	MHz	87,5	—	108	—

■ **Operating Instructions:**

ON/OFF — Turns on and off the Modular Sound Central Unit and interrupts the power to the Sound Control Units.
Turns on and off the TIMER (🕓).

SELECT — Modular Sound Central Unit Off - Turns the LCD backlight for viewing hours.
Modular Sound Central Unit On - Selects the sound source between the AUX Entry and the FM Tuner.

∨ SCAN ∧ — Modular Sound Central Unit Off - allows adjustement of the clock with Button ∨ and ∧.
Modular Sound Central Unit On - allows the automatic and manual search radio stations.

🔊 — Audio Input through 3,5mm Jack.

SURROUNDING SOUND SYSTEM

LOGUS90 sirius70 APOLO 5000 QUADRO 45

2.2 One Stereo Channel Modular Sound Central Unit and Three Stereo Channel Auxiliary Input Module

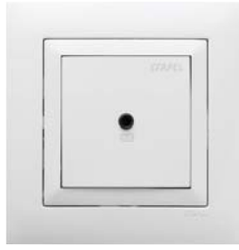

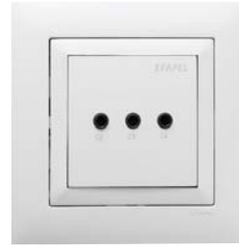

Connections		
Terminal		Parameter
IN	+ (2)	Power Supply (+) 15V⎓
	- (4)	Common (-)
OUT	+ (2)	Power Supply of Command 15V⎓
	- (4)	
AUDIO OUT	15	Sound Output Left 1 Channel
	16	Sound Output Right 1 Channel
	25	Sound Output Left 2 Channel
	26	Sound Output Right 2 Channel
	35	Sound Output Left 3 Channel
	36	Sound Output Right 3 Channel
	45	Sound Output Left 4 Channel
	46	Sound Output Right 4 Channel

Characteristics					
Parameter	Un.	Min.	Prov.	Max.	Obs.
POWER SUPPLY					
Voltage	V⎓	13,5	15,0	16,5	—
Consumption	mA	1,0	—	70	Standby/On
AUDIO INPUTS					
Input Sensitivity	Vrms	—	1,0	—	Vout = 1,2V
Input Impedance	KΩ	—	30,0	—	—
Frequency Response	Hz	20	—	<20k	-3dB

■ **Operating Instructions:**

Audio Input through 3,5mm Jack.

3. SOUND CONTROL UNITS

■ **Description:** The Sound Control Units have the main function to receive the audio signal from the Modular Sound Central Units, from its internal tuner or from an external source , amplify it and distribute it to the Loudspeakers.

Characteristics					
PARAMETER	UNITS	MINIMUM	PROVIDED	MAXIMUM	OBSERVATIONS
POWER SUPPLY					
Power Supply	V⎓	—	12	18	—
Consumption	mA	1,5	60	300	Standby / On / Maximum Power
AUDIO SIGNAL					
Input Sensibility	Vrms	—	2,0	—	—
Input Impedance	KΩ	—	10	—	—
Power Output	W	—	—	1,5 + 1,5	Output Impedance - 32 Ω
Frenquency Response	Hz	30	—	>20k	At -3dB
FM TUNER					
Frequency Range	MHz	87,5	—	108	—

LOGUS90 sirius70 APOLO 5000

4. LOUDSPEAKERS (FLUSH AND SURFACE MOUNTING)

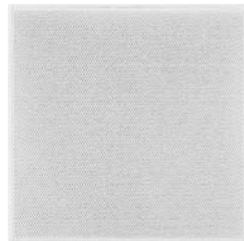

■ **Description:** The Loudspeakers are responsible for receiving the audio signal from the Sound Control Units and turning it into vibrations that are transmitted to the environment, causing the sound.

Characteristics						
PARAMETER	**UNITS**	**MODELS**				**OBSERVATIONS**
Type	Inches	2″	5″	6,5″	5″	1″ = 2,54cm
Installation	—	**Flush Mounting**			**Surface Mounting**	—
Impedance	Ohm	32	32; 16; 8	32; 16; 8	32; 16; 8	—
Maximum Power	W	10	15	60	30	—
Frequency Response	Hz	450 to 5000	70 to 15000	60 to 20000	80 to 19000	At -6dB

5. STEREO / MONO AMPLIFIER

■ **Description:** The Stereo / Mono Amplifier amplifies the audio signal from a Sound Control Unit when it is necessary more audio power than the supplied by a normal Sound Control Unit.

Characteristics					
PARAMETER	**UNITS**	**MINIMUM**	**PROVIDED**	**MAXIMUM**	**OBSERVATIONS**
POWER SUPPLY					
Power Supply	V⎓	—	16	18	—
Consumption	mA	1,4	50	820	Standby / On / Maximum Power
AUDIO SIGNAL					
Input Sensibility	Vrms	—	—	3,5	7V⎓
Output Impedance	Ω	4Ω + 4Ω Stereo / 8Ω Mono			—
Power Output	W	—	3,6 + 3,6	5 + 5	Stereo
			6,4	8	Mono
Frenquency Response	Hz	18	—	33k	At -3dB

SURROUNDING SOUND SYSTEM

6. PRODUCTS SELECTION GUIDE

	POWER SUPPLIES Power Supply suitable to the number of Sound Control Units (Ref. 21380 - 1 Sound Control Unit; Ref. 75053 - 4 Stereo Sound Control Units/8 mono; Ref. 75052 - 10 Stereo Control Units/20 mono)											
	ONE CHANNEL INSTALLATION						FOUR CHANNELS INSTALLATION					
	1 Stero Channel Modular Sound Central Unit (Ref. 21391)				1 Stero Channel Modular Sound Central Unit with FM Tuner (Ref. 21392)		1 Stereo Channel Modular Sound Central Unit + 3 Stereo Channel Auxiliary Input Module (Ref. 21391 + 21393)				1 Stero Channel Modular Sound Central Unit with FM Tuner + 3 Stereo Channel Auxiliary Input Module (Ref. 21392 + 21393)	
	STEREO			MONO	STEREO	MONO	STEREO			MONO	STEREO	MONO
Sound Control Units	1 Stereo Channel Sound Control Unit with FM Tuner, Alarm Clock and IR	1 Stereo Channel Sound Control Unit with FM Tuner and Alarm Clock	1 Stereo Channel Sound Control Unit with FM Tuner	1 Mono Channel Sound Control Unit with FM Tuner	1 Stereo Channel	1 Mono Channel	1 Stereo Channel Sound Control Unit with FM Tuner, Alarm Clock and IR + 4 Stereo Channels Selector Module	1 Stereo Channel Sound Control Unit with FM Tuner and Alarm Clock + 4 Stereo Channels Selector Module	1 Stereo Channel Sound Control Unit with FM Tuner + 4 Stereo Channels Selector Module	4 Mono Channels Sound Control Unit with FM Tuner	1 Stereo Channel Sound Control Units + 4 Stereo Channels Selector Module	4 Mono Channels Sound Control Unit
Reference / **Function**	21370	21379	21377	21373	21372	21371	21370 + 21385	21379 + 21385	21377 + 21385	21378	21372 + 21385	21374
Independent FM Tunner	√	√	√	√			√	√	√	√		
Up and Down automatic Scan	√	√	√	√			√	√	√	√		
Manual Scan	√	√	√	√			√	√	√	√		
Memory of the last selected radio station	√	√	√	√			√	√	√	√		
Visualisation of the radio station	√	√					√	√				
Auxiliary audio input (MP3)	√	√	√		√		√	√	√		√	
Headphones output		√	√		√			√	√		√	
Minimum impedance of 32 Ohm	√	√	√	√	√	√	√	√	√	√	√	√
Volume digital control with 30 positions	√	√					√	√				
Individual volume	√	√	√	√	√	√	√	√	√	√	√	√
Volume memory	√	√	√	√	√	√	√	√	√	√	√	√
General ON/OFF from the Central Control Unit	√	√	√	√	√	√	√	√	√	√	√	√
Digital clock with hour in the display	√	√					√	√				
Alarm clock	√	√					√	√				
Timer until 90 minutes	√	√	√	√	√	√	√	√	√	√	√	√
Finishings of LOGUS 90 Series	√	√	√	√	√	√	√	√	√	√	√	√
Finishings of Sirius 70 Series	√	√	√	√	√	√	√	√	√	√	√	√
Finishings of APOLO 5000 Series	√	√	√	√	√	√	√	√	√	√	√	√
Finishings of QUADRO 45 Series	√	√	√	√	√	√	√	√	√	√	√	√
Infrared Remote Control	√						√					

For non centralized installation (without Modular Sound Central Unit), please follow the highlight columns .

SURROUNDING SOUND SYSTEM

7. PRE-INSTALLATION

■ **Flush Mounting Pre-installation**

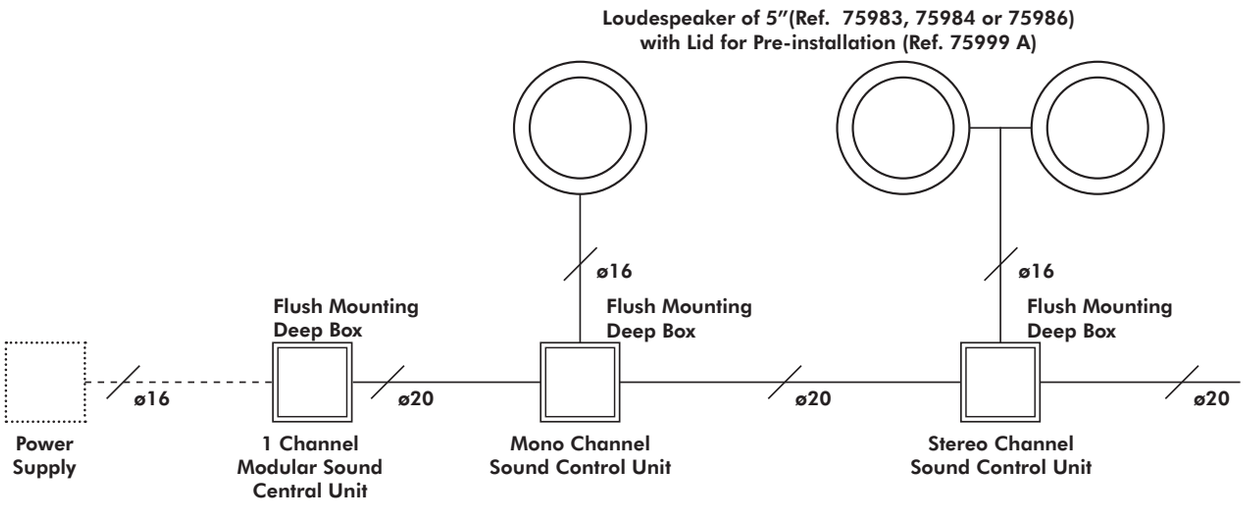

Notes:

- To install the Loudspeakers 5" in hollow ceilings, the diameter of the hole should be **160mm**.
- For Loudspeakers 6,5" the opening should be square and with dimensions of **185mm x 185mm**.

■ **Surface Mounting Pre-installation**

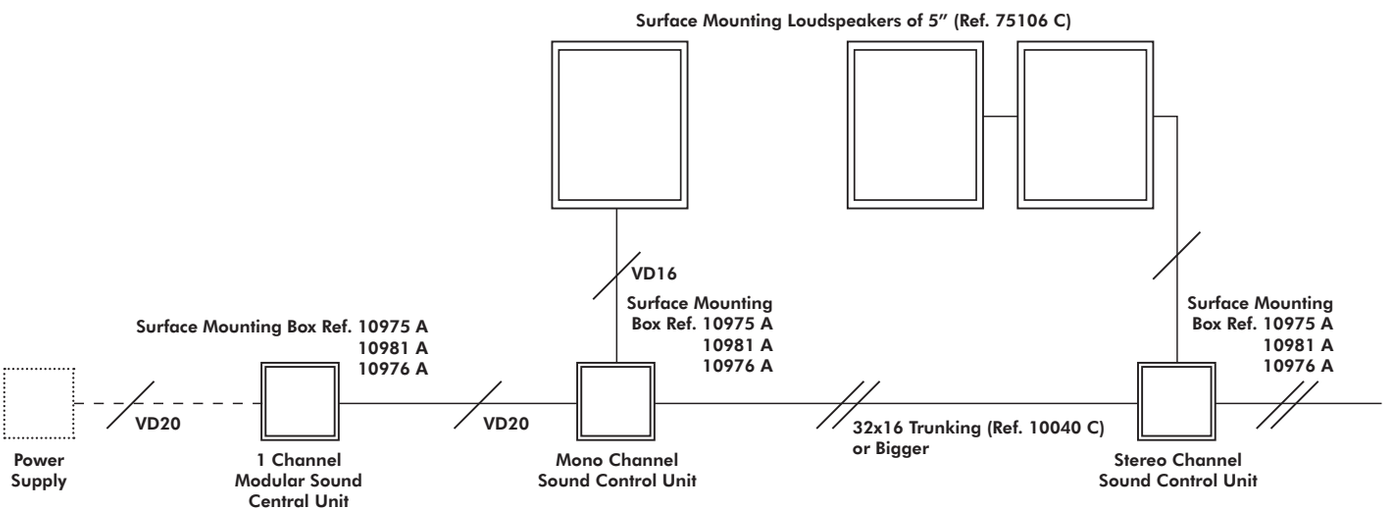

SURROUNDING SOUND SYSTEM

8. NON CENTRALIZED INSTALLATION

■ **Stereo Channel Sound Control Units with/without FM Tuner**

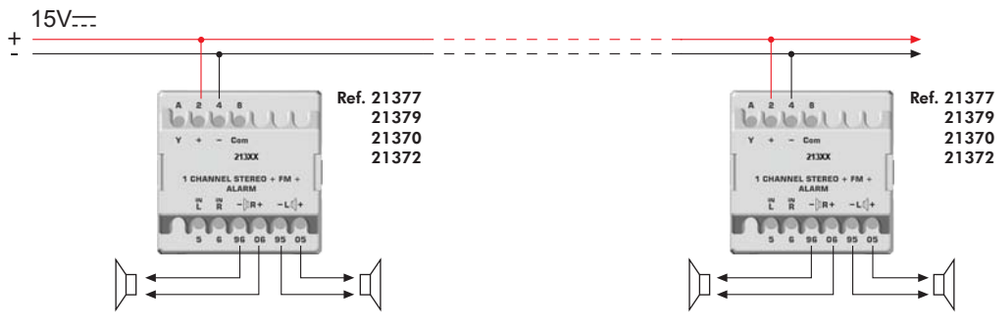

■ **Mono Channel Sound Control Units with/without FM Tuner**

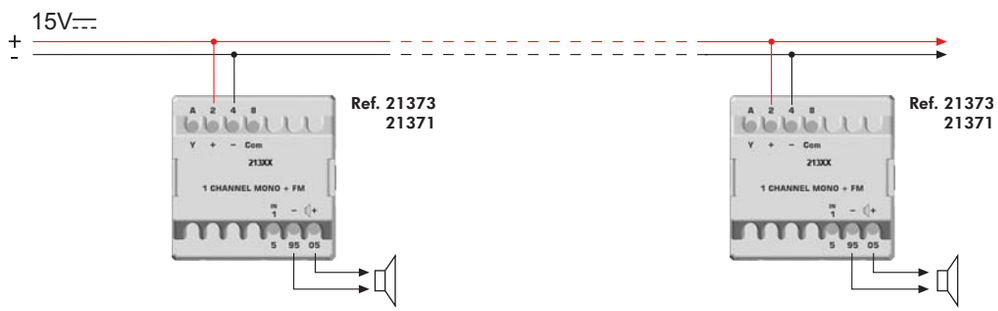

9. CENTRALIZED INSTALLATION

■ **1 Stereo Channel Sound Control Units with/without FM Tuner**

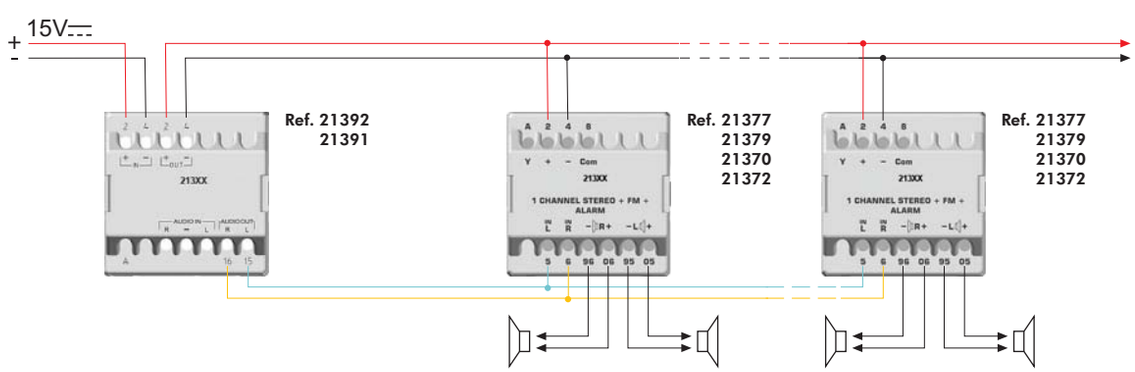

SURROUNDING SOUND SYSTEM

9. CENTRALIZED INSTALLATION (Continuation)

■ 1 Mono Channel Sound Control Units with/without FM Tuner

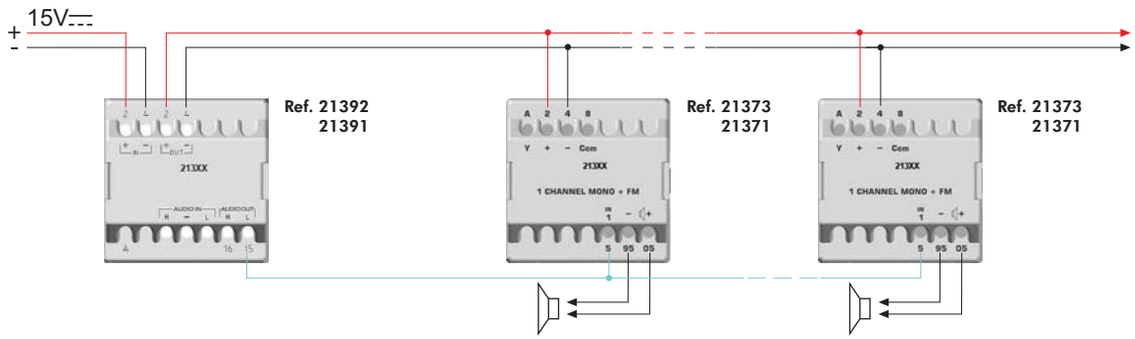

■ 4 Stereo Channels Sound Control Units with/without FM Tuner

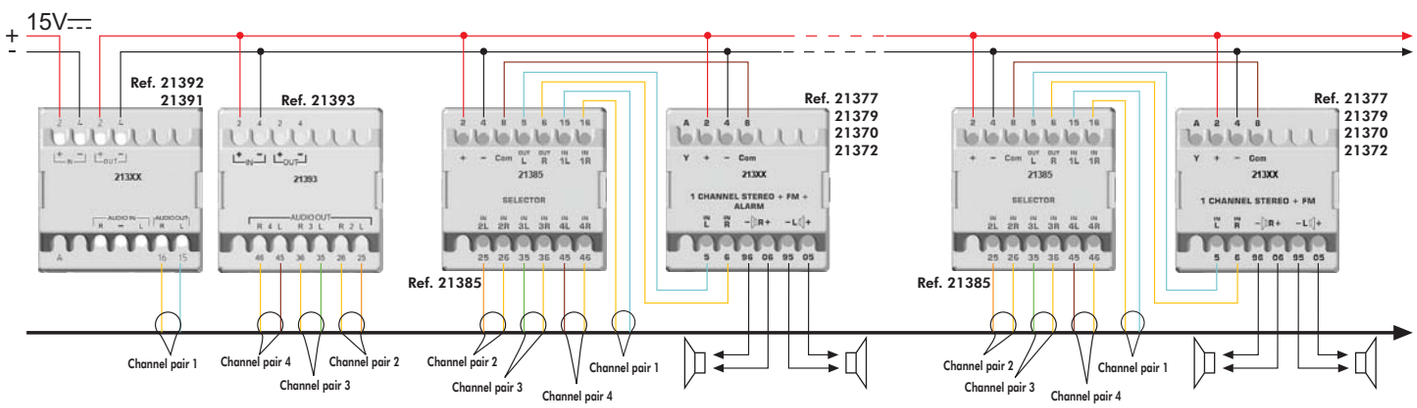

■ 4 Mono Channels Sound Control Units with/without FM Tuner

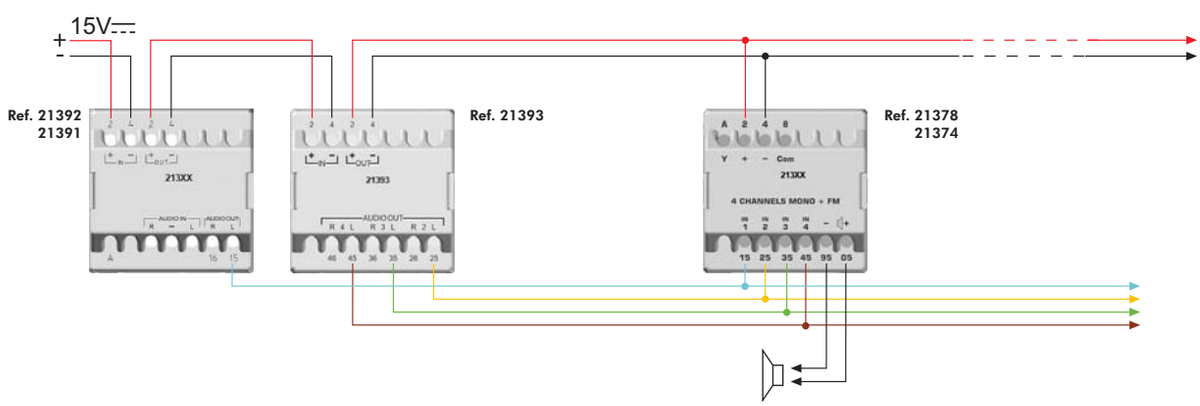

SURROUNDING SOUND SYSTEM

10. SELECTION GUIDE OF LOUDSPEAKERS

Mono Installation

The total impedance of the serial connection must be equal to 32 Ohm

Ref. 75021 C / 75081 C / 75104 C
4x8 Ohm

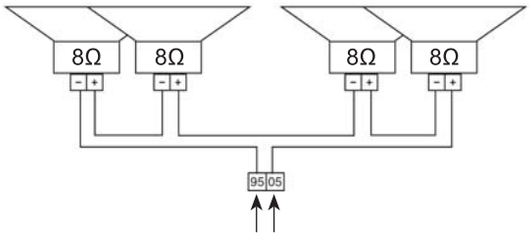

Ref. 75022 C / 75082 C / 75105 C
1x16 Ohm

Ref. 75023 C / 75083 C / 75106 C
2x32 Ohm

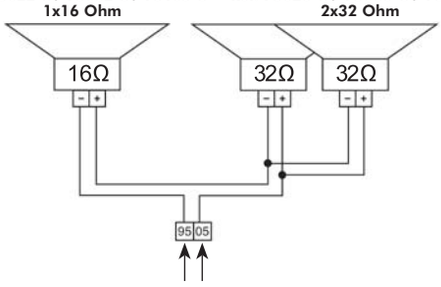

Ref. 75022 C / 75082 C / 75105 C
2x16 Ohm

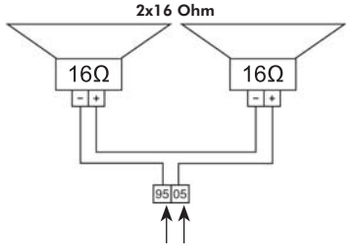

Ref. 75023 C / 75083 C / 75106 C / 21581
32 Ohm

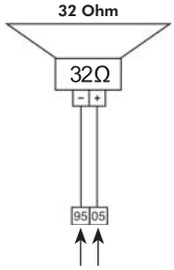

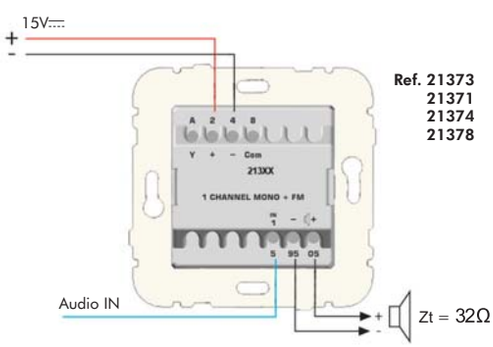

Ref. 21373
21371
21374
21378

Stereo Installation

The total impedance of the serial connection per channel must be equal to 32 Ohm

Ref. 75021 C / 75081 C / 75104 C
4x8 Ohm

Ref. 75021 C / 75081 C / 75104 C
4x8 Ohm

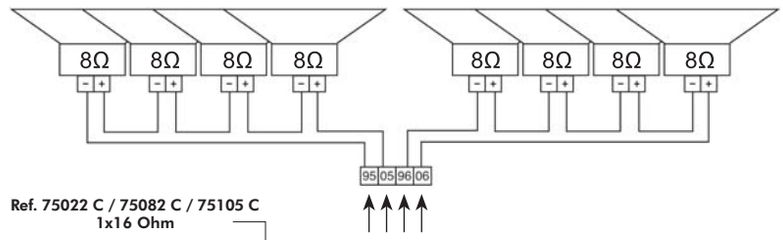

Ref. 75022 C / 75082 C / 75105 C
1x16 Ohm

Ref. 75023 C / 75083 C / 75106 C
2x32 Ohm

Ref. 75023 C / 75083 C / 75106 C
2x32 Ohm

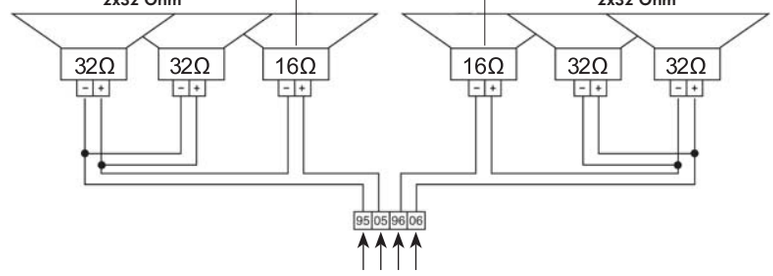

Ref. 75022 C / 75082 C / 75105 C
2x16 Ohm

Ref. 75022 C / 75082 C / 75105 C
2x16 Ohm

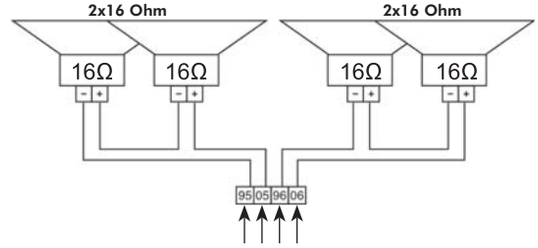

Ref. 75023 C / 75083 C / 75106 C / 21581
32 Ohm

Ref. 75023 C / 75083 C / 75106 C / 21581
32 Ohm

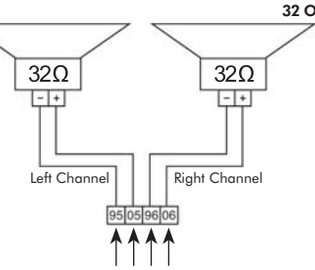

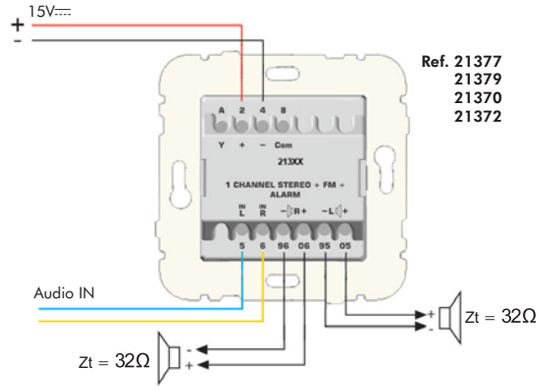

Ref. 21377
21379
21370
21372

SURROUNDING SOUND SYSTEM

10. SELECTION GUIDE OF LOUDSPEAKERS (Continuation)

Mono Installation of 16 Loudspeakers with Stereo/Mono Amplifier

4 groups in series of 4 Loudspeakers of 8 Ohm in pararell (= 8Ω)

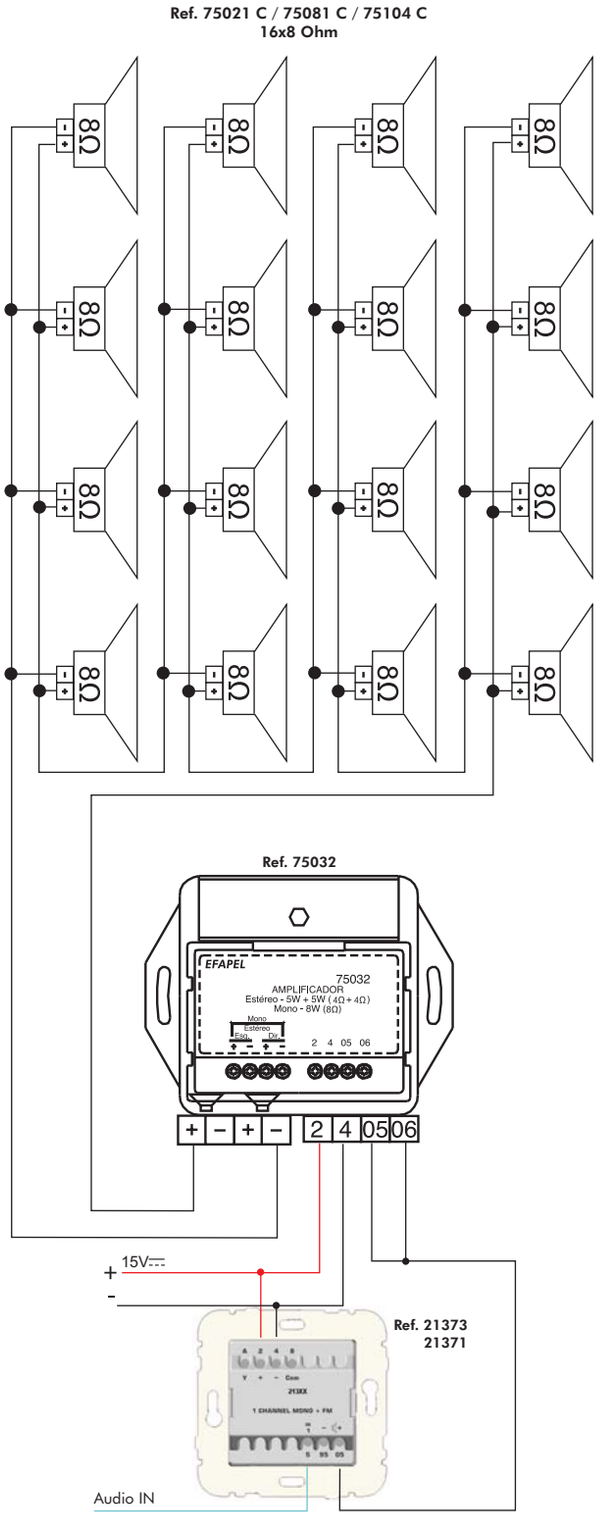

Stereo Installation of 10 to16 Loudspeakers with Stereo/Mono Amplifier

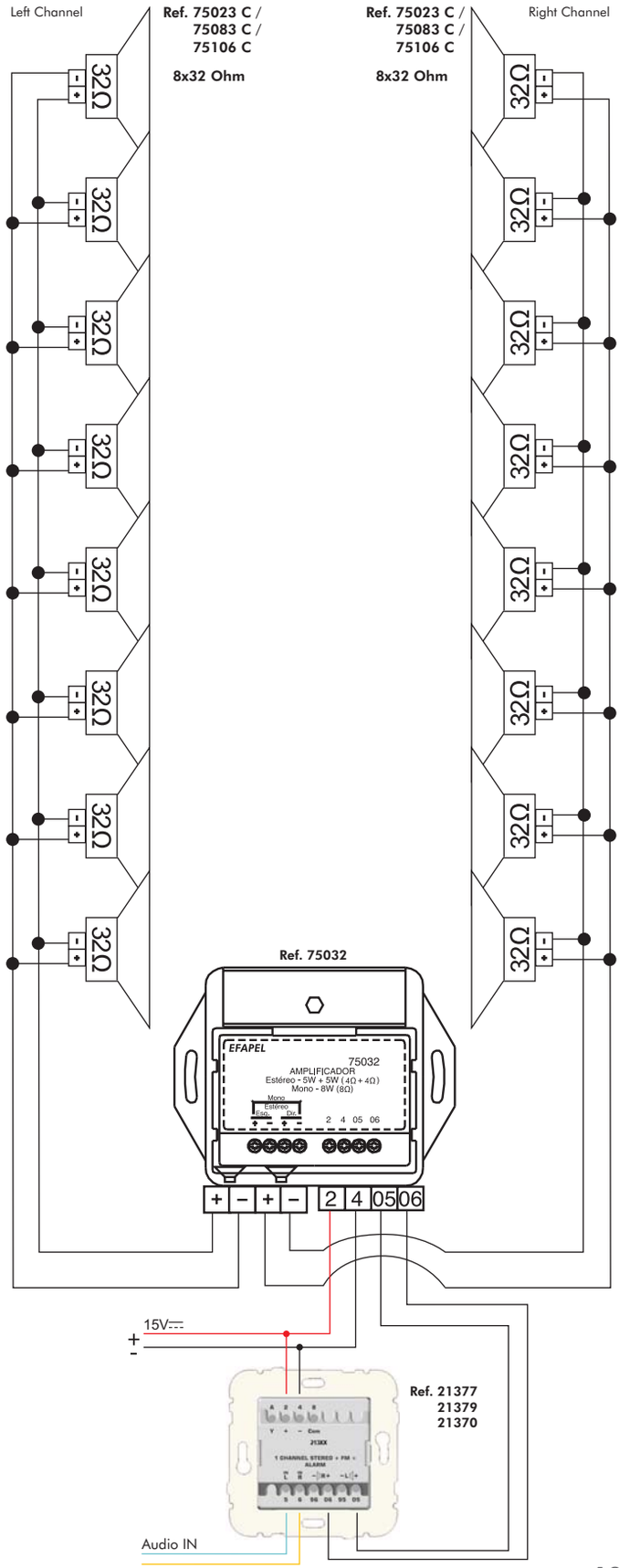

FRAMES DIMENSIONS (mm) - BASE AND AQUARELLA

FRAME + ROCKER

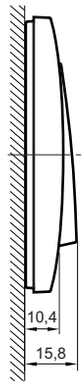

SINGLE

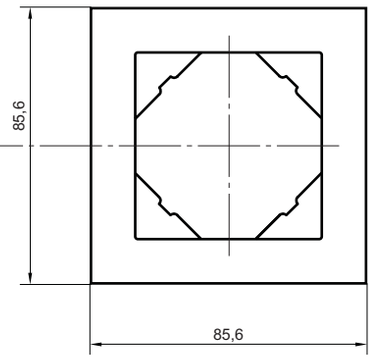

DOUBLE

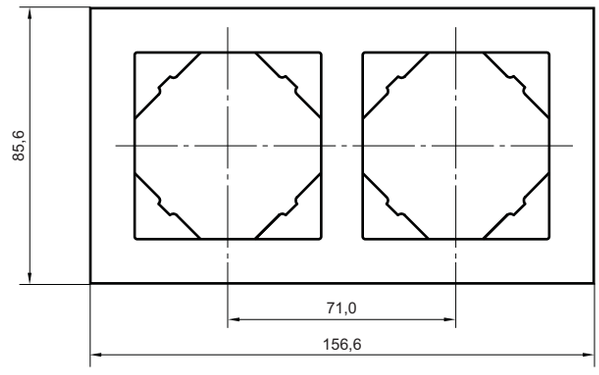

TRIPLE

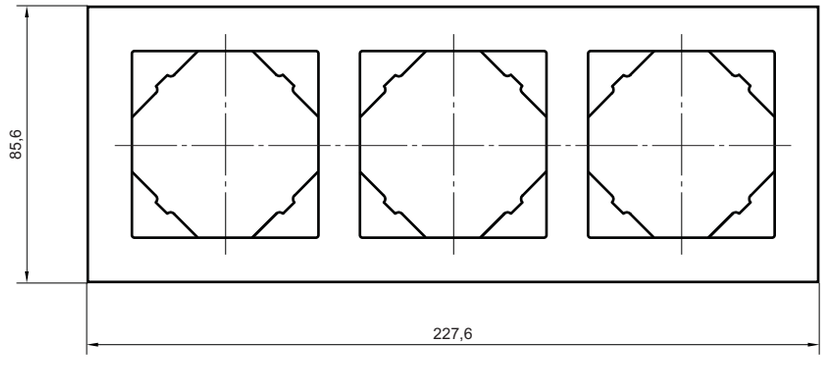

FOUR-GANG

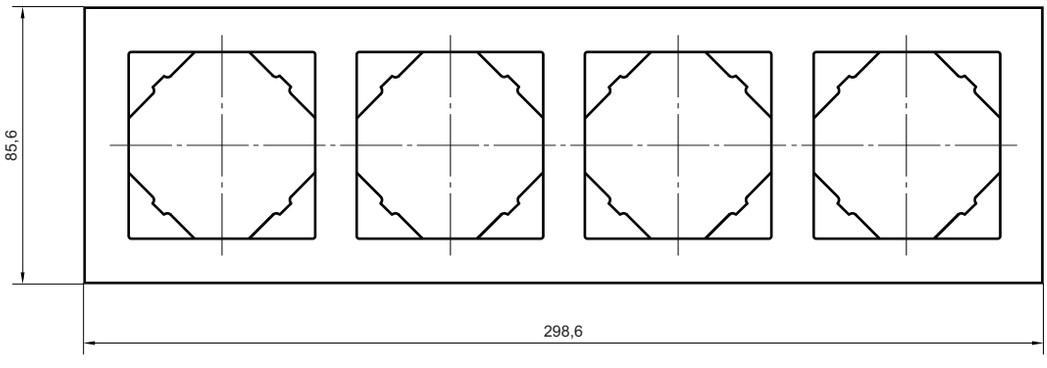

FIVE-GANG

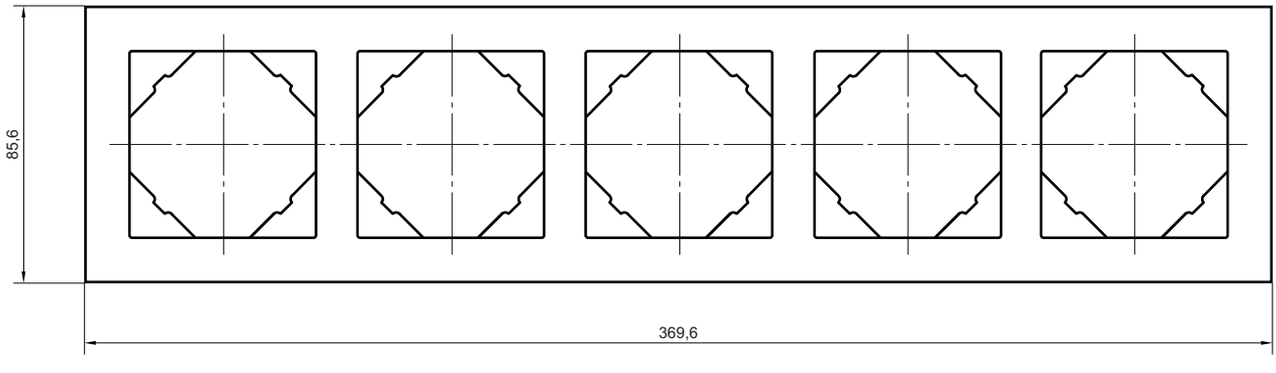

FRAMES DIMENSIONS (mm) - CRYSTAL, METALLO, ARBORE AND PETRA

FRAME + ROCKER

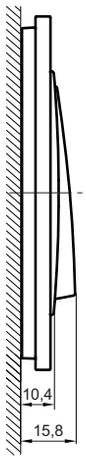

SINGLE

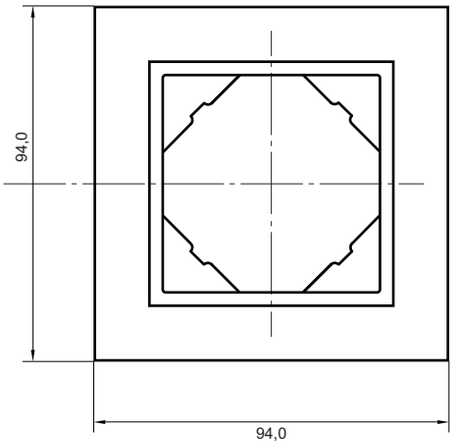

DOUBLE

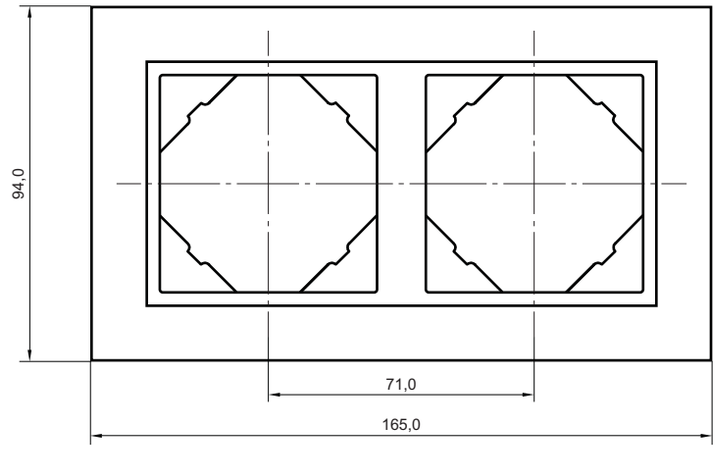

TRIPLE

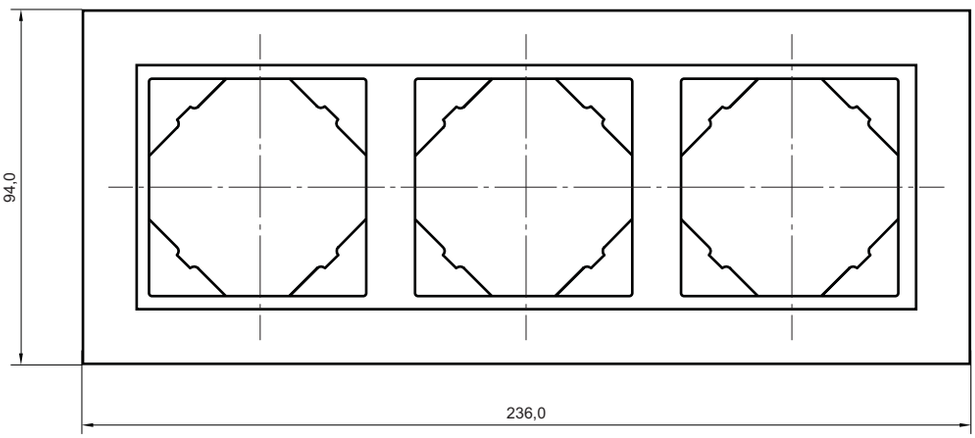

FOUR-GANG

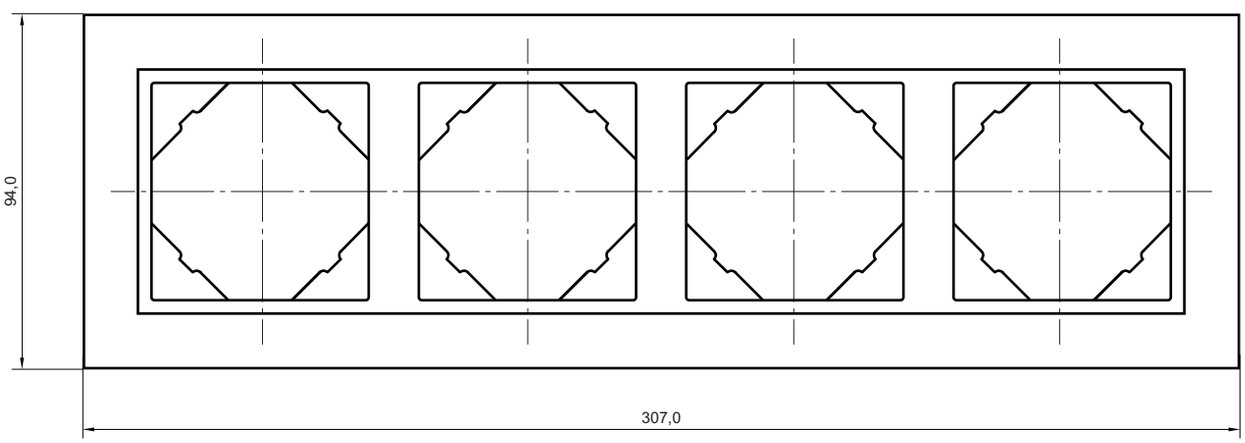

FRAMES DIMENSIONS (mm)

FRAME
+
ROCKER

SINGLE

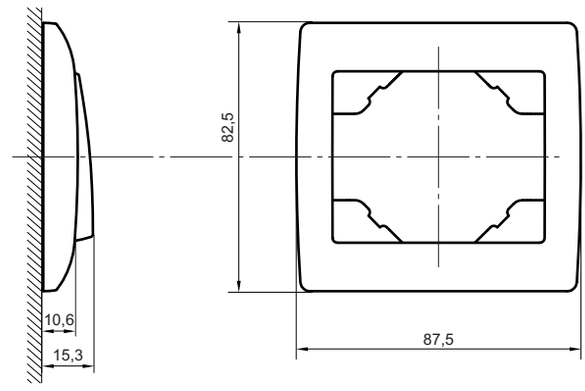

DOUBLE HORIZONTAL

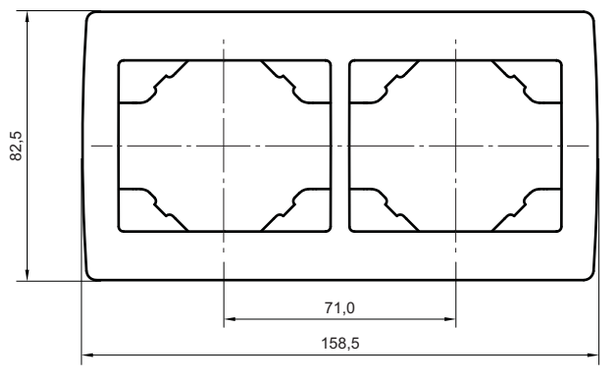

TRIPLE HORIZONTAL

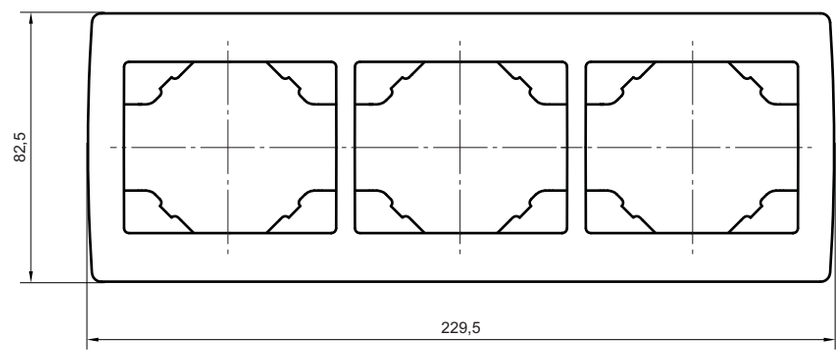

FOUR-GANG HORIZONTAL

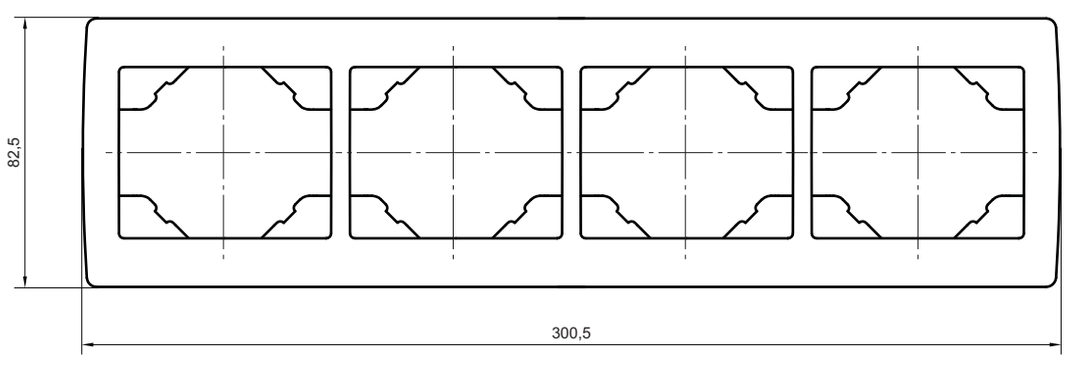

FRAMES DIMENSIONS (mm)

DOUBLE VERTICAL

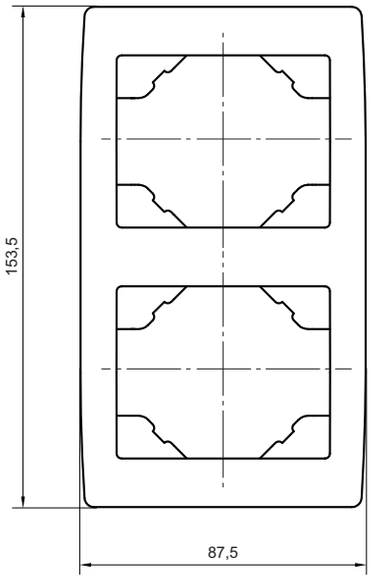

TRIPLE VERTICAL

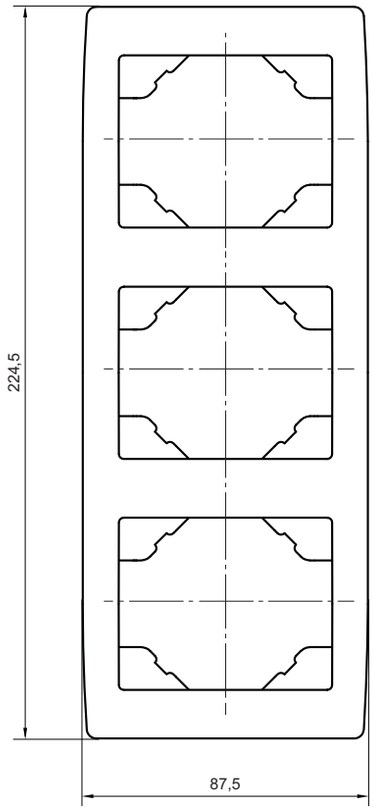

FOUR-GANG VERTICAL

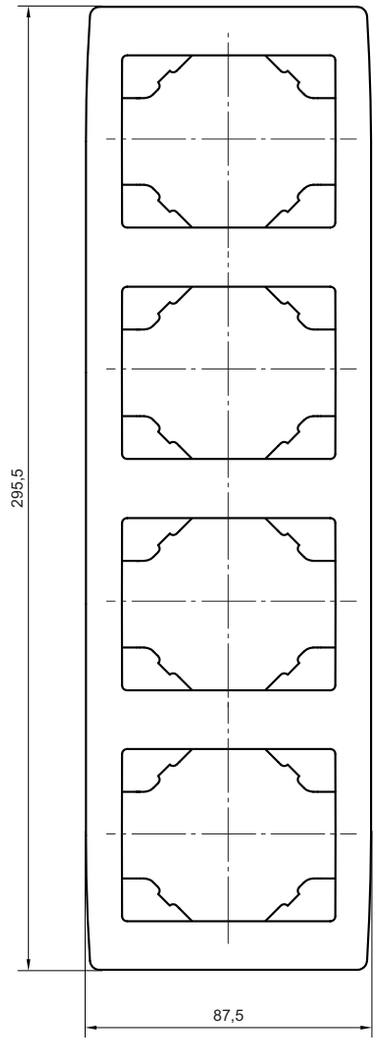

FRAMES DIMENSIONS (mm)

FRAME + ROCKER

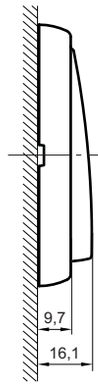

SINGLE

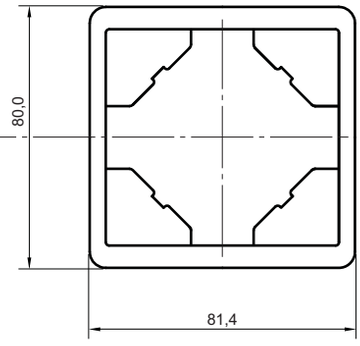

DOUBLE HORIZONTAL

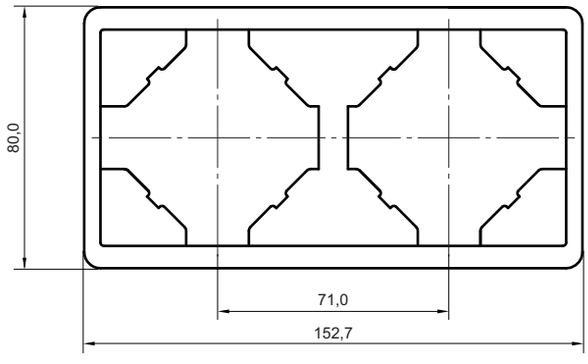

TRIPLE HORIZONTAL

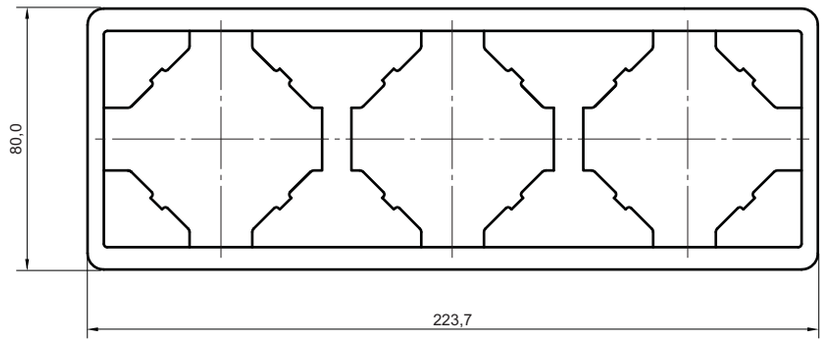

FOUR-GANG HORIZONTAL

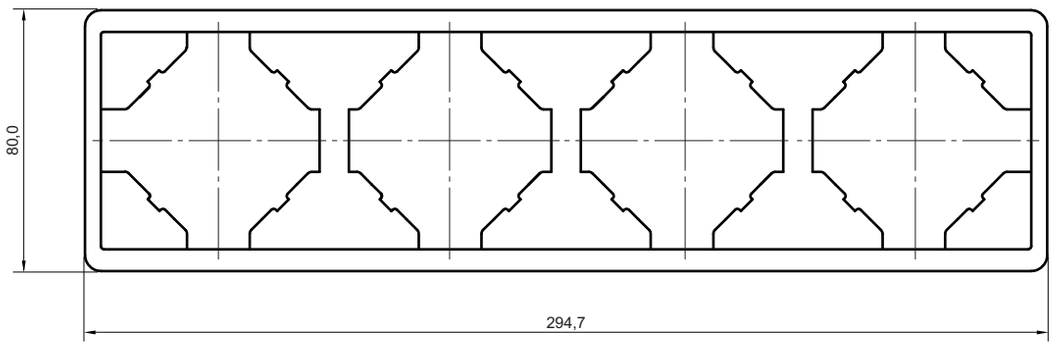

FRAMES DIMENSIONS (mm)

DOUBLE VERTICAL

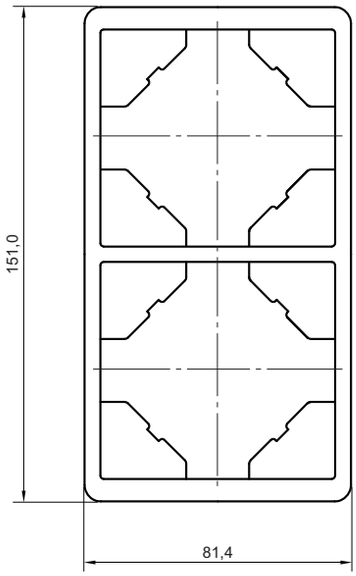

TRIPLE VERTICAL

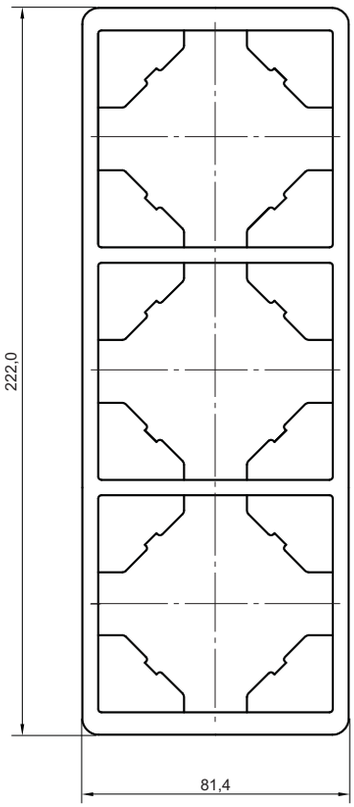

FOUR-GANG VERTICAL

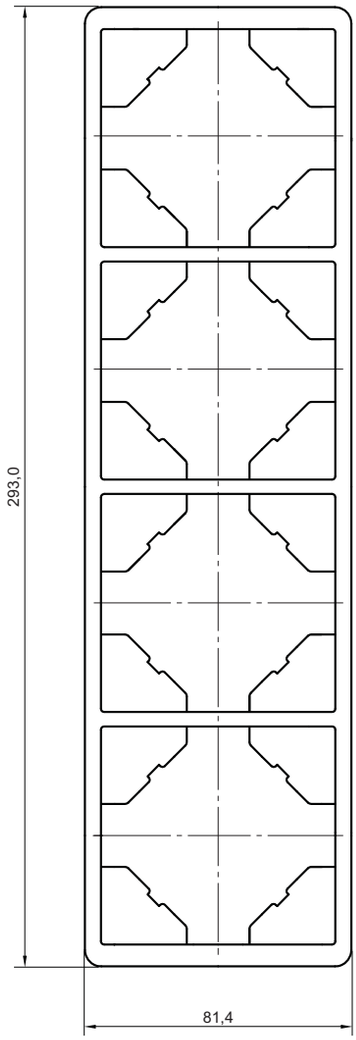

1. CHARACTERISTICS

- **Products in technical thermoplastic.**

IP65

- **Available colors:**
  - Grey (RAL 7035)
  - **White (RAL 9003)**

IK07

- **Draining Holes:**
  All the products of the **Waterproof 48 Series** have two pre-drilled draining holes.
  Depending on the mounting position of the product, the draining hole pointing to the lower part of the base must be open.

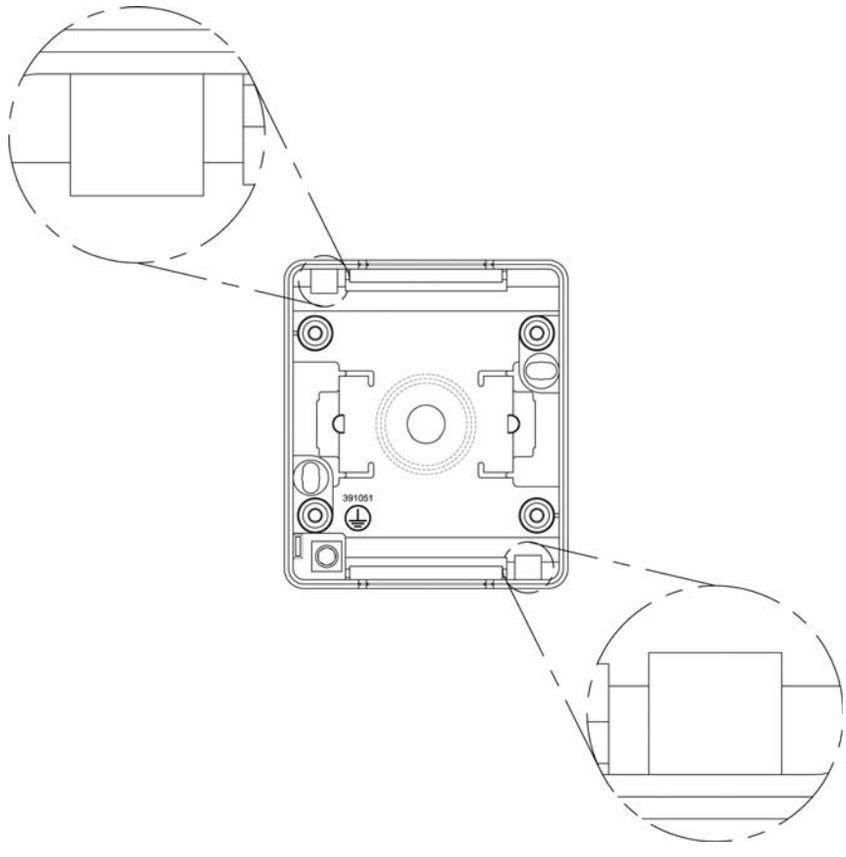

2. DIMENSIONS (mm)

SINGLE

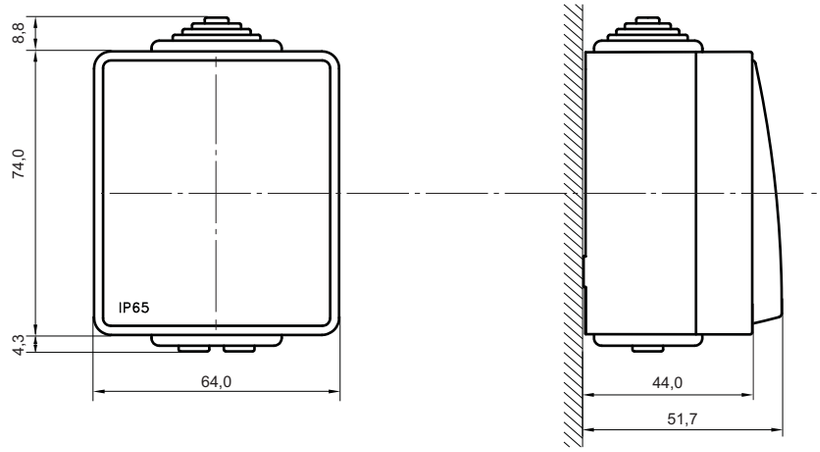

DOUBLE HORIZONTAL

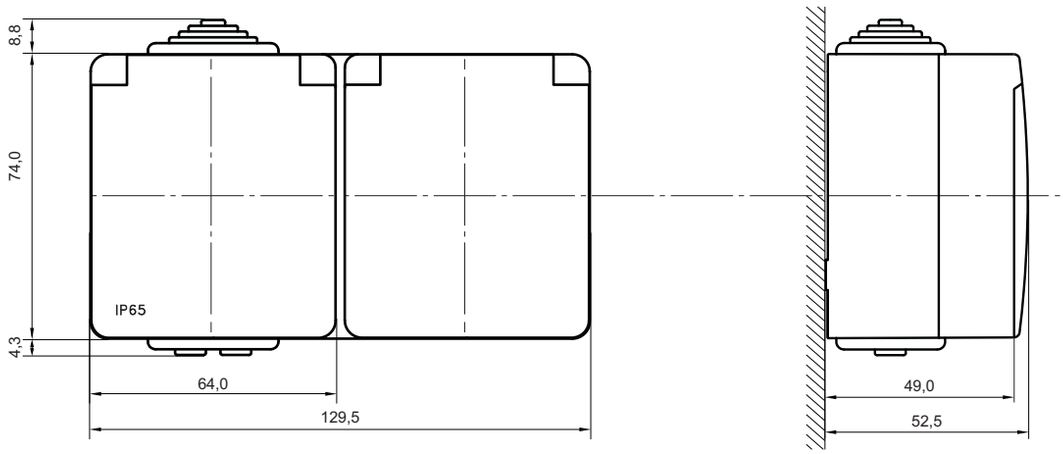

DOUBLE VERTICAL

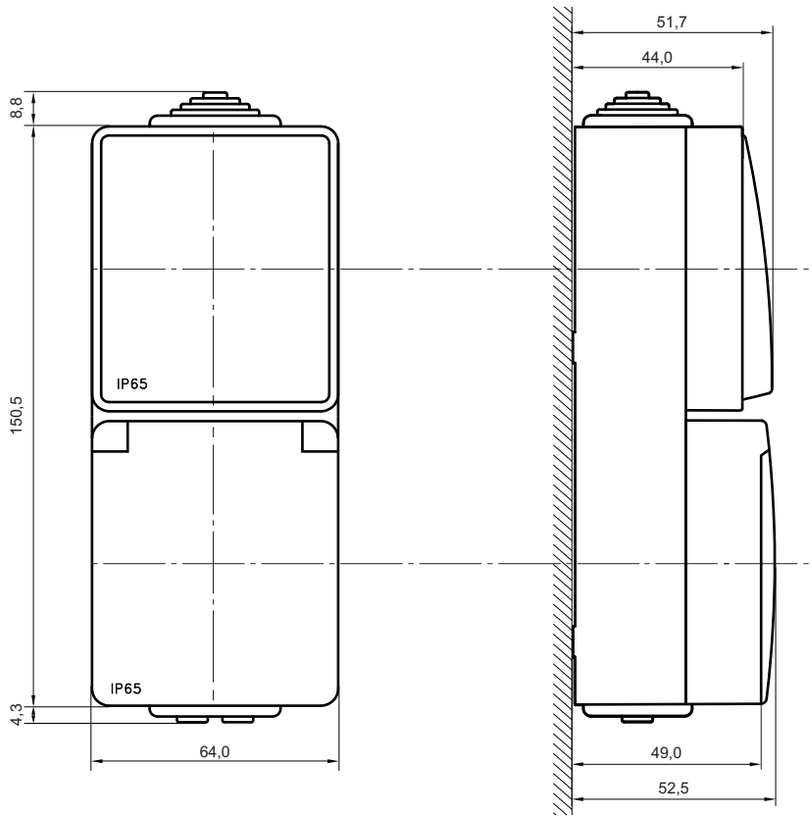

WIRING DIAGRAMS OF 2600, 3700 AND 47 SERIES

SINGLE POLE SWITCH

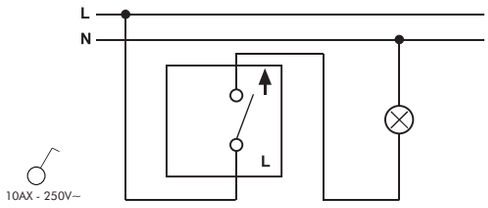

SINGLE POLE SWITCH WITH ORIENTING LIGHT

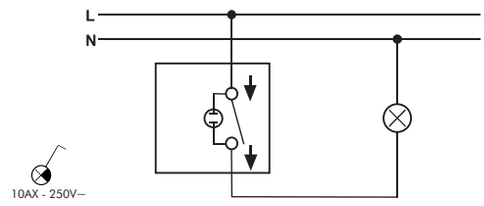

SINGLE POLE SWITCH WITH PILOT LAMP

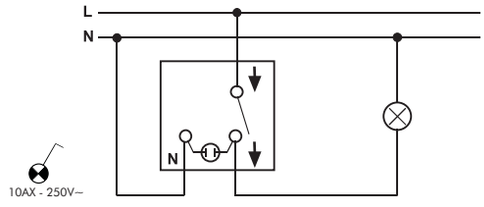

TWO CIRCUITS SWITCH

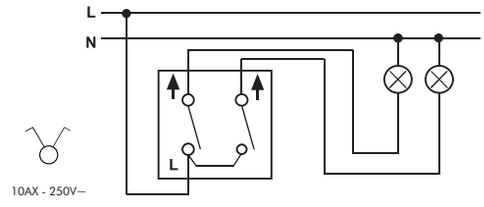

TWO-WAY SWITCH

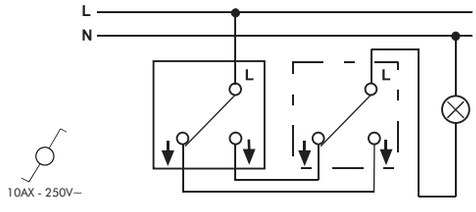

TWO-WAY SWITCH WITH ORIENTING LIGHT

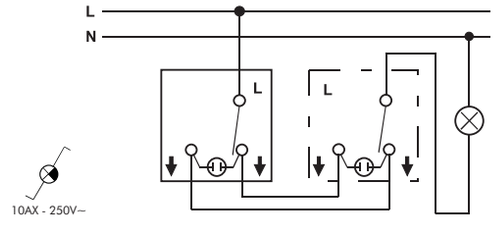

TWO-WAY SWITCH WITH PILOT LAMP

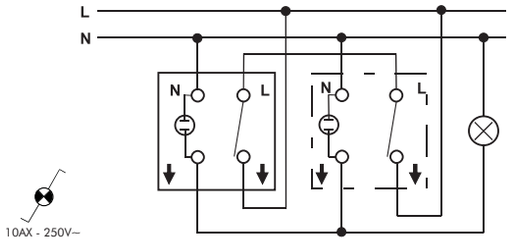

DOUBLE TWO-WAY SWITCH

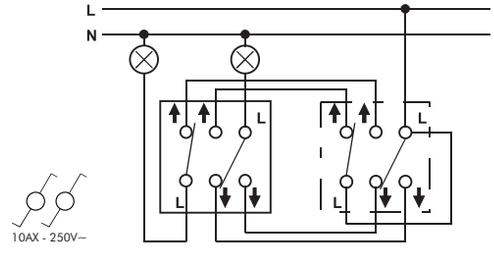

WIRING DIAGRAMS OF 2600, 3700 AND 47 SERIES

INTERMEDIATE SWITCH

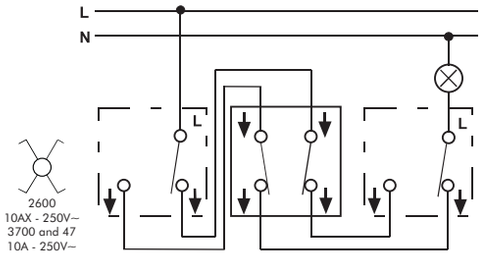

Button PUSH-BUTTON SWITCH

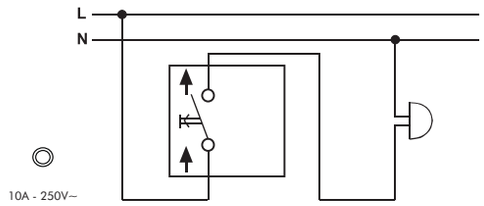

Button PUSH-BUTTON SWITCH WITH ORIENTING LIGHT

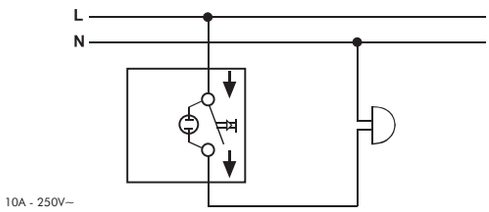

PUSH-BUTTON SWITCH

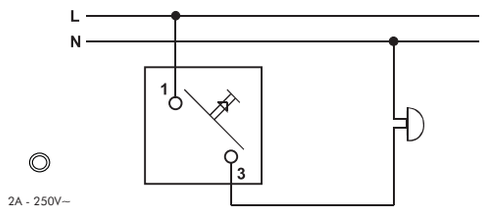

PUSH-BUTTON SWITCH WITH ORIENTING LIGHT (250V)

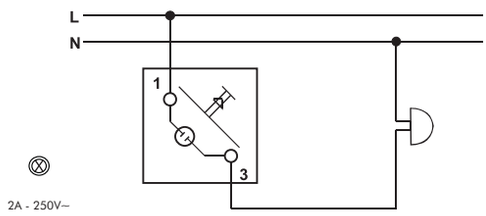

PUSH-BUTTON SWITCH WITH ORIENTING LIGHT (12V)

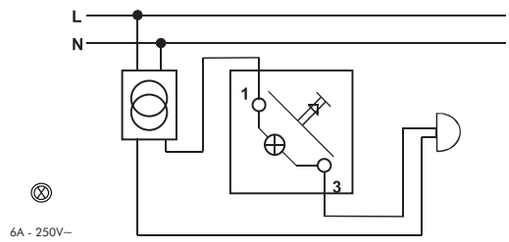

VENETIAN SWITCH

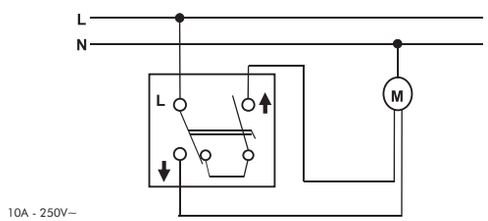

VENETIAN DOUBLE PUSH-BUTTON SWITCH

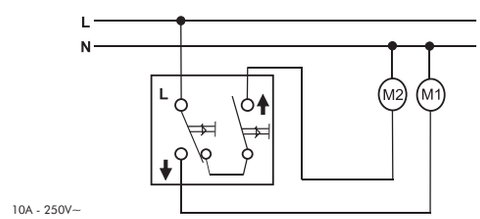

DIMENSIONS (mm)

SWITCHES

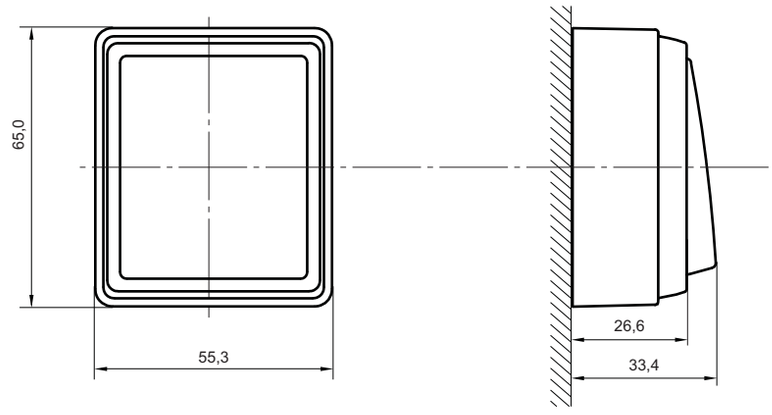

ENERGY SOCKETS

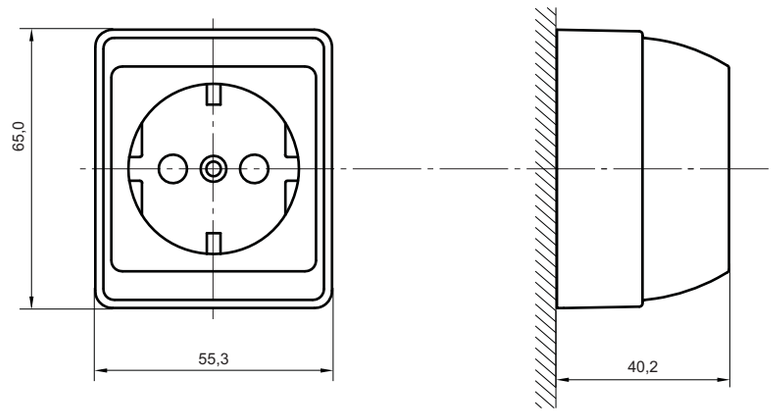

- **Characteristics:**
  - **Products in technical thermoplastic.**
  - **Applied in Surface Mounting Electrical Installations and with the 10 Series Cable-trunkings for Electrical and Telecomunications Installations.**
  - **Available colors:**
    - **White (RAL 9003)**, the same used in the EFAPEL Cable-trunkings Series.

RADIO, TELEVISION AND SATELLITE SOCKETS

3700 Series

47 Series

■ R TV - SAT Sockets (Impedance of 75 Ohm)

LINEAL	Outputs		Insertion Losses (dB)								Insertion Losses dB	Isolation between Outputs dB	Return Losses dB	DC Current Passage mA (DC)
	Male	R TV	Return	BI	FM	VHF	UHF	Dig. TV	SAT					
Ref.	Female	SAT	4-47 MHz	47-68 MHz	87-108 MHz	118-470 MHz	470-822 MHz	822-862 MHz	950-2150 MHz	2150-2400 MHz				
Terminal 37550 47550	IEC Male		1	1	1	1	2	3	--	--	--	--	--	--
	IEC Female		--	--	--	--	--	--	6	6	--	--	--	500mA

■ R - TV Sockets (Impedance of 75 Ohm)

EQUALIZED	Outputs		Insertion Losses (dB)								Insertion Losses dB	Isolation between Outputs dB	Return Losses dB	DC Current Passage mA (DC)
	Male	TV	Return	BI	FM	VHF	UHF	Dig. TV	SAT					
Ref.	Female	R	4-47 MHz	47-68 MHz	87-108 MHz	118-470 MHz	470-822 MHz	822-862 MHz	950-2150 MHz	2150-2400 MHz				
Terminal 37531 47531	IEC Male		0.5	0.5	--	0.5	0.5	0.5	--	--	--	--	--	--
	IEC Female		--	--	1	--	--	--	--	--	--	--	--	--
Crossover 37532 47532	IEC Male		6.0	6.0	--	6.0	6.0	6.0	--	--	2.0	--	--	--
	IEC Female		--	--	6.0	--	--	--	--	--	2.0	--	--	--

DVI - DATA, VOICE AND IMAGE

1. RJ45 UTP CONNECTORS

Ref. 21978
RJ45 Cat. 6 UTP Connector (250 MHz)

Ref. 21975
RJ45 Cat. 5e UTP Connector (100 MHz)

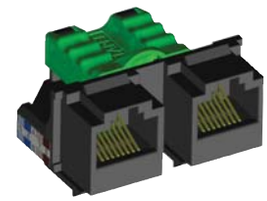

Ref. 21980
Double RJ45 Cat. 5e UTP Connector
(1 input, 2 outputs)

IDC Terminals	EIA/TIA 568 A		EIA/TIA 568 A	
	Pair	Wire Color	Pair	Wire Color
Pin 5	1	White/Blue	1	White/Blue
Pin 4		Blue		Blue
Pin 1	3	White/Green	2	White/Orange
Pin 2		Green		Orange
Pin 3	2	White/Orange	3	White/Green
Pin 6		Orange		Green
Pin 7	4	White/Brown	4	White/Brown
Pin 8		Brown		Brown

■ **Characteristics:**

- Reduced size.
- Quick assembly.
- Tool-free connection (connectors with self-peeling contacts).
- Robust and secure connection through an effective crimping and insulation system of the cables.
- Easy identification of the type of connector (Cat. 6 - Red and Cat. 5e - Green).
- Universal Keystone clamping system.
- Identification of contacts by double color code (EIA/TIA 568 A and 568 B).

■ **Assembly Sequence:**

■ Introduce the cable.
■ Separate the pairs.
■ Put the cables in the terminals.

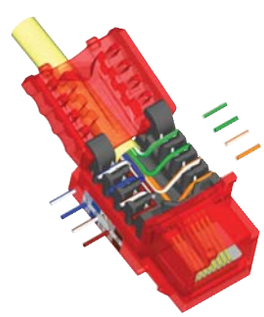

■ Cut the excess of cables.

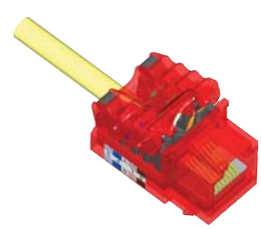

■ Close the lid and press until it is fixed to the base.

DVI - DATA, VOICE AND IMAGE

2. RJ45 STP CONNECTORS

Ref. 21985
RJ45 Cat. 5e STP Connector (100 MHz)

Ref. 21988
RJ45 Cat. 6 STP Connector (250 MHz)

■ **Characteristics:**
- Reduced size.
- Assembly with the Insertion Tool.
- Shielded with a metal cover.
- Universal Keystone clamping system.

568 A/B STANDARD

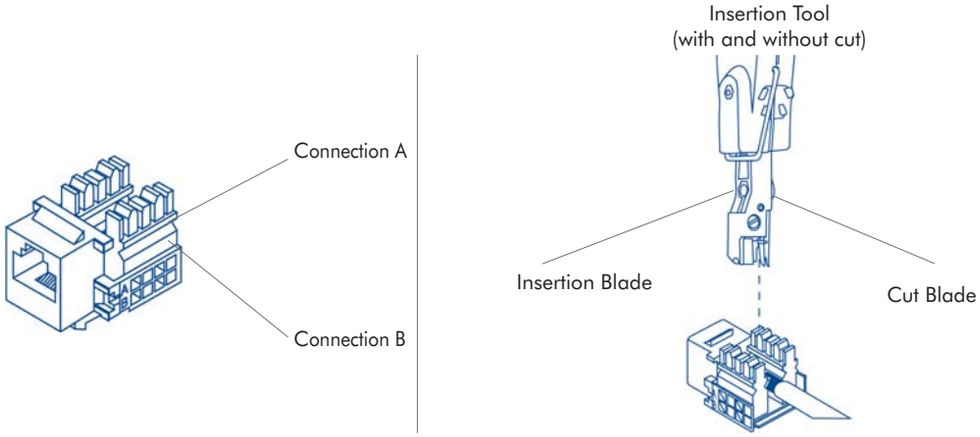

Note: In order to maintain the same category along the installation it must be used the same categories in the equipments or the same color code EIA/TIA 568 (A or B).

3. COUPLERS FOR FIBRE OPTIC CONNECTORS

SC-APC

NEW

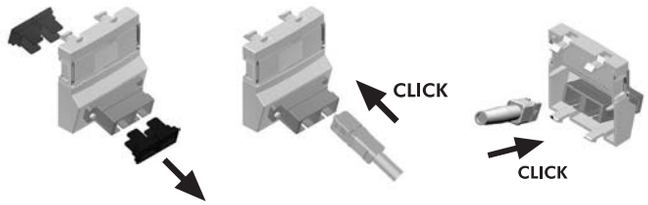

LC

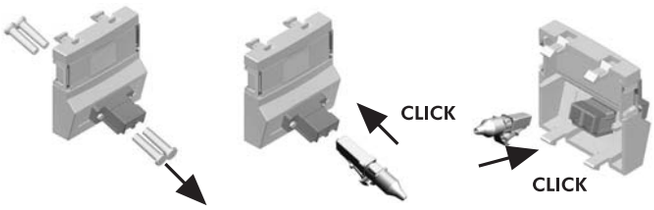

CLASSIFICATION OF CABLE-TRUNKINGS - EN 50085-2-1 Standard - Section 6

10 Series - Cable-trunkings for Electrical and Telecommunications Installations

Section 6	Classification	Miniature and Floor Cable-trunkings		Distribution Cable-trunkings
6.2	Resistance to the impact during the installation and application	12x7	**0,5 J**	**2 J**
		110x20	**1 J**	
		16x10 / 20x12,5 / 32x16 / 40x12,5 / 40x16 / 60x16 / 75x20	**2 J**	
6.3	Minimum Storage and Transport Temperature	-25°C		-25°C
6.3	Minimum Installation and Application Temperature	-5°C		-5°C
6.3	Maximum Installation Temperature	60°C		60°C
6.4	Resistance to flame propagation	Non-flame propagating		Non-flame propagating
6.5	Electrical continuity characteristic	Without Electrical continuity		Without Electrical continuity
6.6	Electrical Insulation	With electrical insulating		With electrical insulating
6.7	Protection degree provided by enclosure	**IP44**		**IP44**
6.8	Protection against corrosive or polluting substances	Medium protection outside and inside		Medium protection outside and inside
6.9	Access system and retention of the cover	The cover can only be opened with a tool		The cover can only be opened with a tool
6.10	Electrically protective separation	With and without internal protective partition (divider)		With internal protective partition (divider)
6.101	Intended installation positions	Surface mounted on wall and/or on the ceilling		Surface mounted on wall and/or on the ceilling
6.102	Prevention of contact between liquids and insulated conductors and live parts in case of mounted in a skirting position and on wet-treatment of floor	Not declared		Not declared
6.103	Type	Type 3 (Installation)		Type 3 (Installation)
	Rated Voltage	500V		500V

RoHS

RoHS - All the Cable-trunkings and the respective Accessories manufactured by EFAPEL fulfil the specifications of the RoHS 2002/95/CE Directive that restricts the use of certain hazardous substances like lead, mercury, cadmium, hexavalent chromium, polybrominated biphenyls (PBB) and polybrominated diphenyl ether (PBDE).

CLASSIFICATION OF CABLE-TRUNKINGS - EN 50085-2-1 Standard - Section

16 Series - Distribution Modular Cable-trunkings
13 Series - Trunkings for the Protection of Cables and Pipes

Section 6	Classification	16 Series - Distribution Modular Cable-trunkings	13 Series - Trunkings for the Protection of Cables and Pipes
6.2	Resistance to the impact during the installation and application	**5 J**	**5 J**
6.3	Minimum Storage and Transport Temperature	-25°C	-25°C
6.3	Minimum Installation and Application Temperature	-5°C	-5°C
6.3	Maximum Installation Temperature	60°C	60°C
6.4	Resistance to flame propagation	Non-flame propagating	Non-flame propagating
6.5	Electrical continuity characteristic	Without Electrical continuity	Without Electrical continuity
6.6	Electrical Insulation	With electrical insulating	With electrical insulating
6.7	Protection degree provided by enclosure	**IP44**	**IP44**
6.8	Protection against corrosive or polluting substances	Medium protection outside and inside	Medium protection outside and inside
6.9	Access system and retention of the cover	The cover can only be opened with a tool	The cover can only be opened with a tool
6.10	Electrically protective separation	With internal protective partition (divider)	Without internal protective partition (divider)
6.101	Intended installation positions	Surface mounted on wall and/or on the ceilling	Surface mounted on wall and/or on the ceilling
6.102	Prevention of contact between liquids and insulated conductors and live parts in case of mounted in a skirting position and on wet-treatment of floor	Not declared	Not declared
6.103	Type	Type 3	Type 2
	Rated Voltage	500V~	500V~

RoHS

RoHS - All the Cable-trunkings and the respective Accessories manufactured byEFAPEL fulfil the specifications of the RoHS 2002/95/CE Directive that restricts the use of certain hazardous substances like lead, mercury, cadmium, hexavalent chromium, polybrominated biphenyls (PBB) and polybrominated diphenyl ether (PBDE).

PROTECTION INDEX (IK) OF CABLE-TRUNKINGS - EN 50102 Standard

10 Series - Cable-trunkings for Electrical and Telecommunications Installations

Ref.	Outside Dimensions (mm)	Protection against the Mechanical Schoks IK
Miniature Cable-trunkings		
10010 CBR	12x7	IK05
10020 CBR	16x10	IK07
10030 CBR	20x12,5	IK07
10040 CBR	32x16	IK07
10050 CBR	40x12,5	IK07
10060 CBR	40x16	IK07
10070 CBR	60x16	IK07
10140 CBR	75x20	IK07
Skirt Cable-trunkings		
10100 CBR	110x20	IK05
Distribution Cable-trunkings		
10080 CBR	110x34	IK08
10090 CCZ	110x50	IK08

16 Series - Distribution Modular Cable-trunkings

Ref.	Outside Dimensions (mm)	Protection against the Mechanical Schoks IK
16010 CBR	75x50	IK08
16020 CBR	90x50	IK08
16030 CBR	155x50	IK08
16040 CBR	185x50	IK08
16050 CBR	90x65	IK08
16060 CBR	185x65	IK08

13 Series - Trunkings for the Protection of Cables and Pipes

Ref.	Outside Dimensions (mm)	Protection against the Mechanical Schoks IK
13010 CBR	25x30	IK08
13020 CBR	40x40	IK08
13030 CBR	60x40	IK08
13040 CBR	60x60	IK08
13050 CBR	80x40	IK08
13060 CBR	80x60	IK08
13070 CBR	100x40	IK08
13080 CBR	100x60	IK08

TABLES of CABLES and CRITERIA for CABLE-TRUNKINGS SELECTION

Table of Cables

■ Energy Cables

Diameter and Section Table of some common use cables.
(The dimensions may vary according to the manufacturer.)

■ Data and Telephone Cables

Diameter and Section Table of some common use data cable, UTP, STP, FTP and Coaxial type.
(The dimensions may vary according to the manufacturer.)

Type of Cable	Nominal Section (mm)	Diameter (mm)	Section (mm^2)	Type of Cable	Diameter (mm)	Section (mm^2)
H05 VV-F	2x0,75	7,6	58	4 Pairs UTP Cat. 5e Cable	6,2	37,5
H05 VV-F	2x1	8,0	64	4 Pairs FTP Cat. 5e Cable	6,9	47,2
H05 VV-F	2x1,5	9,0	81	4 Pairs UTP Cat. 6 Cable	7,6	57
H05 VV-F	2x2,5	11,0	121	4 Pairs FTP Cat. 6 Cable	8,3	68
H05 VV-F	3 G 0,75	8,0	64	RG 59 Coaxial Cable	6,2	38,4
H05 VV-F	3 G 1	8,4	71	RG 58 Coaxial Cable	5	25
H05 VV-F	3 G 1,5	9,8	96	RG 11 Coaxial Cable	10,5	110,3
H05 VV-F	3 G 2,5	12,0	144	RG 8 Coaxial Cable	10,3	106,1
H07 V-U	1x1,5	2,8	7,84	RG 7 Coaxial Cable	8,1	65,6
H07 V-U	1x2,5	3,4	11,56	RG 6 Coaxial Cable	7	49
H07 V-U	1x4	3,8	14,44	TVHV 1x2x0,5 Cable	4,3	18,5
H07 V-U	1x6	4,4	19,36	TVHV 2x2x0,5 Cable	5,0	25
H07 V-K	1x1,5	3,5	12	TVHV 3x2x0,5 Cable	5,7	32,5
H07 V-K	1x2,5	4,2	18	TVHV 6x2x0,5 Cable	6,5	42,3
H07 V-K	1x4	4,8	23	TVHV 10x2x0,5 Cable	7,8	60,8
H07 V-K	1x6	6,3	40	TVHV 15x2x0,5 Cable	8,7	75,7
H07 V-K	1x10	7,6	58	TVHV 20x2x0,5 Cable	9,7	94,1
VV-0,6/1 KV	3x16+10	20,7	428	TVHV 30x2x0,5 Cable	12,0	144
VV-0,6/1 KV	3x25+16	23,0	529	TVHV 40x2x0,5 Cable	13,5	182,3
VV-0,6/1 KV	3x35+16	25,0	625	TVHV 50x2x0,5 Cable	15,0	225
VV-0,6/1 KV	4 G 1,5	11,4	130	TVHV 100x2x0,5 Cable	20,0	400

Criteria for Cable-trunkings Selection

Examples for common installations:

Cables to be Installed

Type of Cable	Quantity (Q)	Nominal Section (S)	Outside Diameter (d) (mm)	Unitary Section (Su) (Su= dxd)	Total Section (St) (mm^2) (SuxQ)
H07 V-U	20	1x4	3,8	14,44	288,8
H07 V-U	15	1x6	4,4	19,36	290,4
H07 V-U	10	1x2,5	3,4	11,56	115,6
H07 V-U	10	1x4	3,8	14,44	144,4
				Cable Total Section (**St**)	**839,2mm²**
				Minimum Trunkings Section = Cables Total Section (St) x K = **839,2 x 1,4** =	**1174,88mm²**

Typical K values to ensure better ventilation, crossings and possible augmentations:

K = Filling Coefficient

K = 1,4 for Low Voltage, Power Cable
K = 1,3 for Data and Telephone Cables
K = 1,2 for Tubes

It is possible to choose one of the following EFAPEL's cable-trunkings:

Cable-trunkings			
Ref.	Description	Internal Section (mm^2)	Available Section (mm^2)
10080 CBR	110x34 Trunking	3111,2	2222
13030 CBR	60x40 Trunking	1973,7	1410
16020 CBR	90x50 Trunking	3956	2826

MODULAR PROTECTIONS AND DEVICES FOR ELECTRICAL PANELS

The products of the MODUS 55 Series are designed and manufactured in accordance with European and International Standards that rule these type of products:

- **EN 60898 - IEC 60898:** "Circuit Breakers for Overcurrent Protection for household and similar installations"
- **EN 61008 - IEC 61008:** "Residual Current operated Circuit Breakers without integral Overcurrent Protection for household and similar uses"
- **EN 61643-1:** "Low-voltage Surge Protective Devices - Part 1: Surge Protective Devices Connected to Low-voltage Power Distribution Systems"
- **EN 60947-3 - IEC 60947-3:** "Low-voltage Switchgear and Controlgear - Part 3: Switches, Disconnectors, Switch-disconnectors and Fuse-combination Units"

1. MINIATURE CIRCUITS BREAKERS (MCBs)

■ Characteristics:

Characteristics	Range						
Type	**PLUS**	**SUPER**			**ULTRA**		
Rated Voltage	230/400V~	230/400V~			230/400V~		
Breaking Capacity	4,5kA	6kA			10kA		
Tripping Curve	C	C	B	D	C	B	D
Rated Current	6 to 63A	1 to 63A	1 to 63A	1 to 63A	1 to 63A	1 to 63A	1 to 63A
Energy Limitation Class	3	3			3		
Isolation Voltage	660V~						
Protection Index	**IP20**						
Certification	SEMKO						

■ Dimensions (mm):

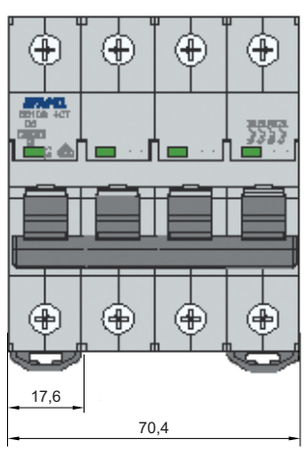

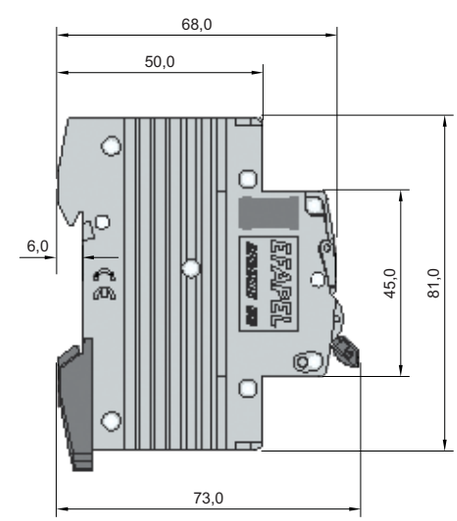

MODULAR PROTECTIONS AND DEVICES FOR ELECTRICAL PANELS

■ **Tripping Curves:**

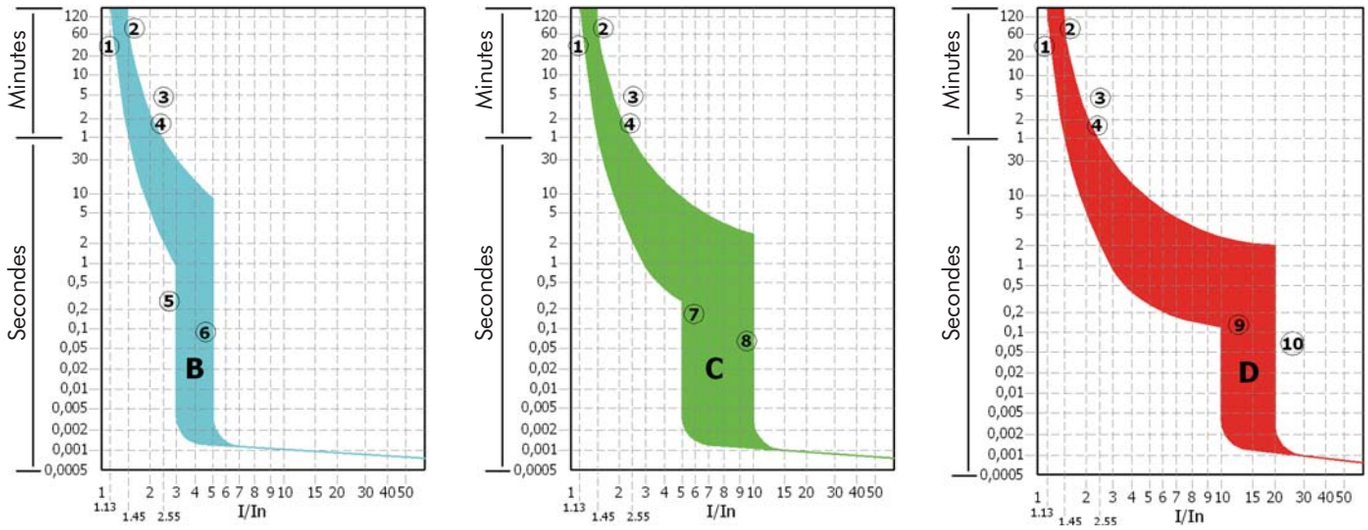

■ **Operating Time** when **Operating in Overload:**

Current	Operating time	Zone
1,13 In	t ≥ 1 hour	①
1,45 In	t < 1 hour	②
2,55 In	In ≤ 32A ⇨ t < 60sec.	③
	In > 32A ⇨ t < 120sec.	④

■ **Operating Time** when **Operating in Short-circuit:**

Tripping Characteristics	Current	Operating Time	Zone	Use
B	3 In	t ≥ 0,1sec.	⑤	Protection of electrical circuits with resistive loads.
	5 In	t < 0,1sec.	⑥	
C	5 In	t ≥ 0,1sec.	⑦	Protection of general purpose electrical circuits.
	10 In	t < 0,1sec.	⑧	
D	10 In	t ≥ 0,1sec.	⑨	Protection of electrical circuits with loads that produce high transient currents.
	20 In	t < 0,1sec.	⑩	

MODULAR PROTECTIONS AND DEVICES FOR ELECTRICAL PANELS

2. RESIDUAL CURRENT CIRCUIT BREAKERS (RCCBs)

■ Characteristics:

Characteristics	DIF Range	
Number of Poles	**2**	**4**
Rated Voltage	230V~	400V~
Type	A and AC Classes	A and AC Classes
Sensibility	10, 30, 300 and 500mA	30, 300 and 500mA
Rated Current	16, 25, 40 and 63A	25, 40 and 63A
Breaking Capacity	10 In for In ≤ 50A 630A for In = 63A	
Isolation Voltage	660V~	
Protection Index	**IP20**	
Certification	SEMKO	

Transient Protection - The Residual Current Circuit Breakers DIF Type are protected against nuisance tripping caused by transient leakage currents (lightning, capacitive loads).

AC Class - General purpose, protects the environment in the presence of leakage of current with a purely sinusoidal waveform.

A Class - For facilities with equipment such as rectifiers, triacs, etc., causing a leakage of current with DC current components, undetectable by the AC Class devices.

■ Dimensions (mm):

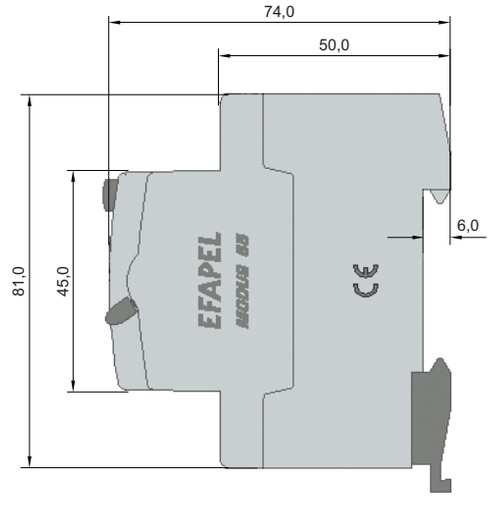

MODULAR PROTECTIONS AND DEVICES FOR ELECTRICAL PANELS

3. OVER-VOLTAGE AND SURGE PROTECTION DEVICES - IEC 61643-1 STANDARD (SPDs)

■ Characteristics:

Characteristics	References			
	55410 1DC	55420 1DC	55440 1DC	55460 1DC
Un - Rated Voltage (cov)	230V~	230V~	230V~	380V~
Uc - Maximum Continuous Operating Voltage	320V~	320V~	320V~	420V~
Up - Protection Level (8/20 µseg)	1,0kVp	1,2kVp	1,5kVp	2,0kVp
In - Rated Discharge Current (8/20 µseg)	5kA	10kA	20kA	30kA
Imax - Maximum Discharge Current (8/20 µseg)	10kA	20kA	40kA	60kA
Tr - Response Time	< 25ns			
T - Operating Temperature	-40°C to +80°C			
P - Number of Poles	1			
Protection Index	**IP20**			
Terminal's Capacity	1x50mm² or 2x20mm²			
Colour of the Body	Red	Orange	Grey	Brown

■ Rules for the installation of Over-voltage and Surge Protection Devices

- The correct operation and performance of the SPDs are assured when the ground installation is made in accordance with the official electrical codes, rules and prescriptions determined by the government or by the official entities.
- The total length of the connection cables to the SPDs (L) must be as short as possible (<0,5m).
- It must be avoided to make derivations in the circuit of the SPDs. With currents up to 50A, the derivations must be made over the same terminals of the SPDs (terminal's connection capacity: 2 x 20mm² cross section cables).
- The circuit where the SPDs are connected must be protected against overloads and short circuits. It is recommended the use of a MCBs of 32 A - C Curve (C32).
- If the installation has different protection levels against over voltages, it is recommended that the length of the cable that connect the main SPDs with a secondary SPDs is greter than 1m, in order to avoid the simultaneous conduction of both devices.

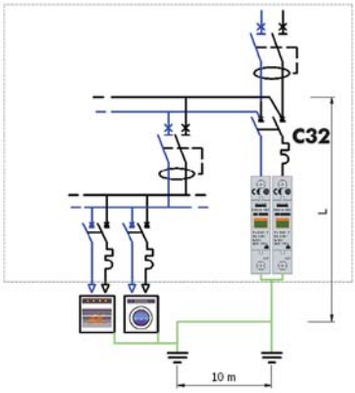

■ Dimensions (mm):

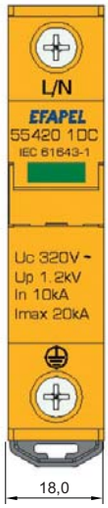

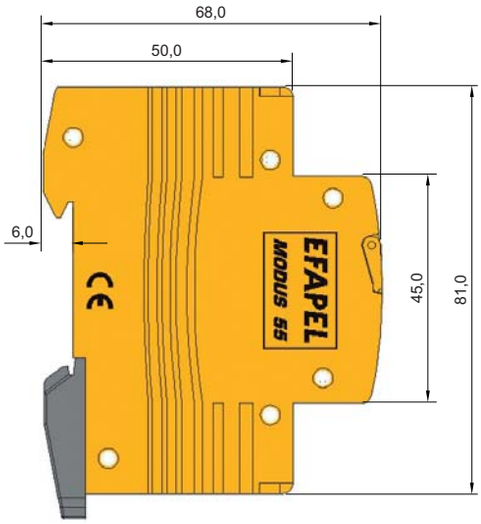

MODULAR PROTECTIONS AND DEVICES FOR ELECTRICAL PANELS

4. STAIRCASES TIME-DELAY SWITCH

■ **Description**: It allows the manually connecting and automatically disconnecting of a lighting installation after a programmed time-delay. The activation is made by the use of standard or luminous push-buttons (Max 50 mA).

■ **Characteristics:**

Characteristics	
Rated Voltage	230V~ - 50/60Hz
Rated Current	10A
Time Adjustment	45sec. to 7min.
Size	1 Mód. DIN
Operating Temperature Range	-10°C to 60°C
Protection Index	**IP20**
Insulation Class	Class II
Maximum stand-by current of Push-Buttons	50mA

■ **Operating Instructions:**

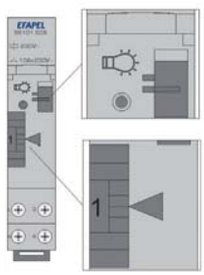

– Manual Control

Always ON

Automatic Operation

– Automatic Control

– Time Adjustment: turn the knob until it points to the desired value of time.

– The staircases time-delay switch is provided with the command circuit closed (the light will turn on when is connected for the first time) and the first interruption will happen after finalized the first timing cycle.

■ **Installation:** DIN track, in electrical panels.

■ **Wiring Diagrams:**

a) With 3 wires

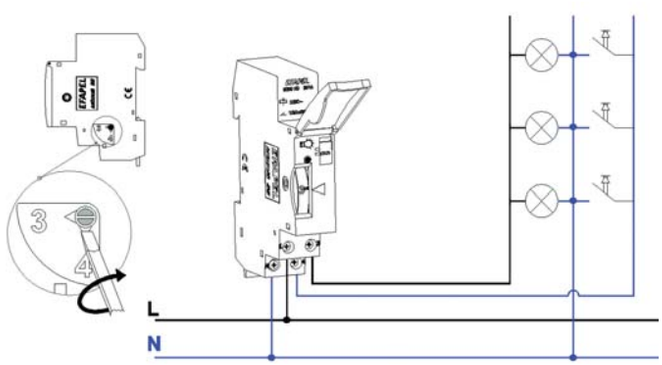

b) With 4 wires

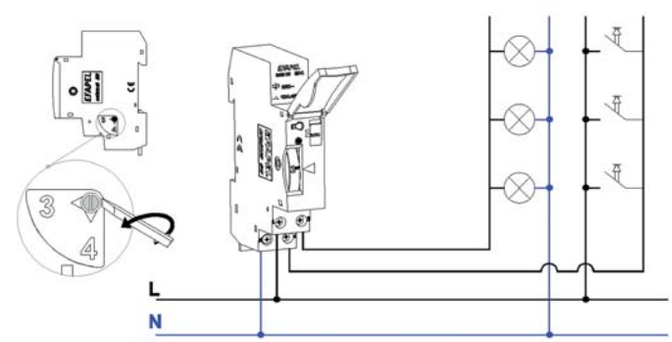

MODULAR PROTECTIONS AND DEVICES FOR ELECTRICAL PANELS

5. ANALOGUE DAILY CLOCK SWITCH OF 1 CHANNEL

■ **Description**: It allows to control the operation of an electric installation or an equipment according with a daily program. The minimum time of a program is 15 minutes.

■ **Characteristics:**

Characteristics	
Rated Voltage	230V~ - 50/60Hz
Rated Current	16A
Battery Back-up Time	100h
Precision	1sec./day
Programming Time (Max/Min)	24h/15min
Size	1 Mod. DIN
Power Consumption	0,5W
Operating Temperature Range	-10°C to +50°C
Protection Index	**IP20**
Insulation Class	Class II

■ **Operating Instructions:**

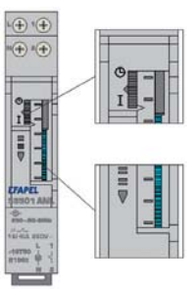

– Manual Control: 2 Positions

⏲ - Automatic Operation

I - Always ON

– Programming: Shift to the left all the cams corresponding to the time periods needed for the operation.

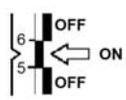

■ **Installation:** DIN track, in electrical panels.

■ **Wiring Diagram:**

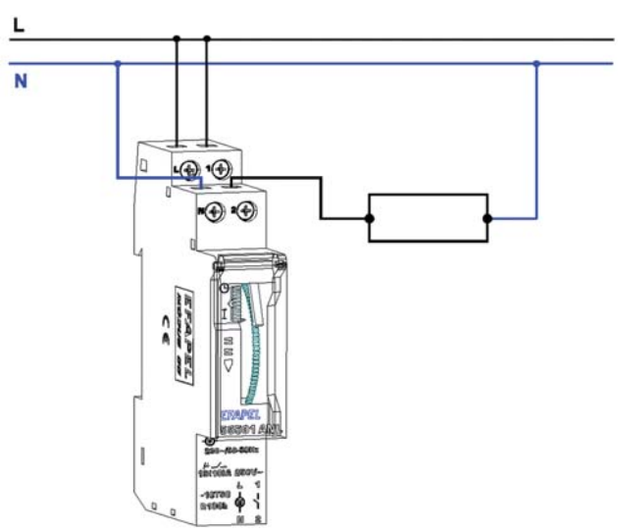

MODULAR PROTECTIONS AND DEVICES FOR ELECTRICAL PANELS

6. DIGITAL DAILY/WEEKLY CLOCK SWITCH OF 1 CHANNEL

■ **Description**: It allows to control the operation of an electric installation or an equipment according with a daily or a weekly program. It can memorize the programs with a maximum capacity of 32 Blocks. The output functions are ON, OFF and Impulse from 1 to 59 seconds. It produces the automatic adjustment of the time in Summer and Winter. Is possible to program a Stand By period.

■ **Characteristics:**

Characteristics	
Rated Voltage	230V~ - 50/60Hz
Rated Current	16A
Battery Back-up Time	100h
Precision	1sec./day
Memory Capacity	32 Blocks
Output Functions	ON, OFF and Impulse (1 to 59sec.)
Size	2 Mod. DIN
Power Consumption	1W
Operating Temperature Range	-10°C to +50°C
Protection Index	**IP20**
Insulation Class	Class II
Output Type	NO and NC

■ **Recommended Maximum Loads:**

- Incandescent Lamps: 300W
- Fluorescent Lamps: 1200W
- Halogen Lamps MBT: 1000VA (with Transformer)
- Halogen Lamps 230V~: 2500W
- Energy Saving Lamps: 200W

■ **Operating Instructions:**

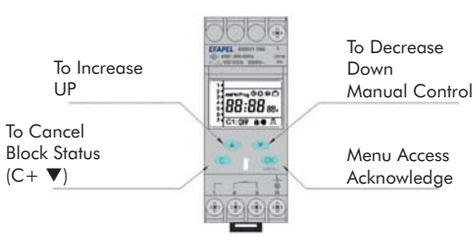

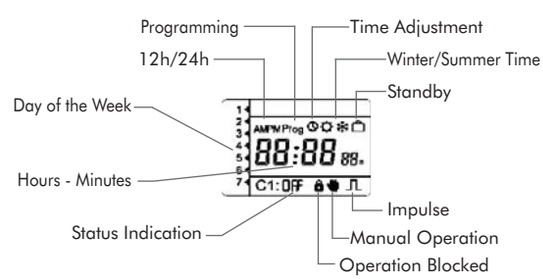

■ **Installation:** DIN track, in electrical panels.

■ **Wiring Diagram:**

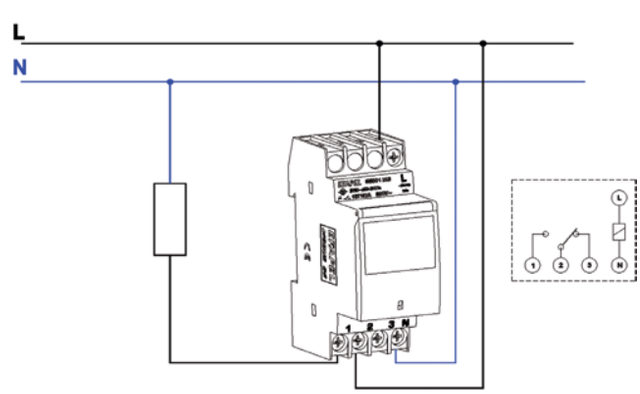

MODULAR PROTECTIONS AND DEVICES FOR ELECTRICAL PANELS

7. CONTACTOR 2 POLE

■ **Description**: It allows to control a specific load that needs a High Rated Current through a command that has a low breaking capacity, creating a separation of the high power circuit from the command circuit.

■ **Characteristics:**

Characteristics	
Rated Voltage	230V~
Rated Current	20A
Frequency	50/60Hz
Control Voltage	230V~
Size	1 Mod. DIN
Output Contact	2NA
Operating Temperature Range	-10°C to +50°C
Protection Index	**IP20**
Insulation Class	Class II

■ **Installation:** DIN track, in electrical panels.

■ **Wiring Diagram:**

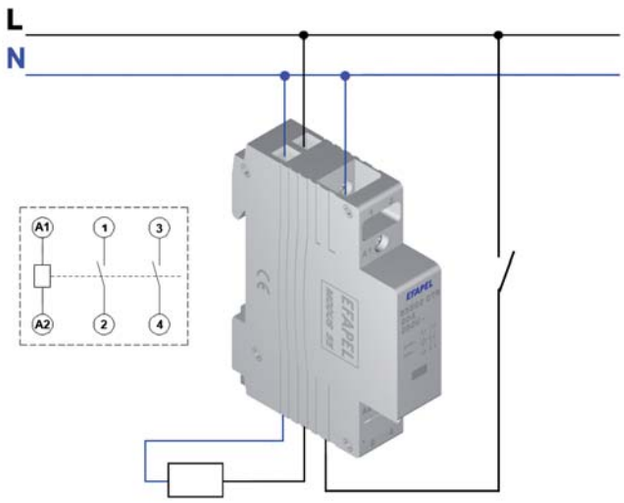

PROTECTION INDEX

1. Protection index against the penetration of solid objects and against the water (IP)

Protection degree of the enclosures of the electrical equipments in accordance with the **EN 60529** and **IEC 60529** Standards.

1st digit (Protection against solid bodies)

IP		Test
0	No protection.	
1	Protected against solid objects whose diameter is greater than or equal to 50mm.	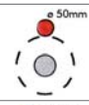
2	Protected against solid objects whose diameter is greater than or equal to 12,5mm.	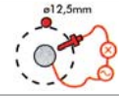
3	Protected against solid objects whose diameter is greater than or equal to 2,5mm.	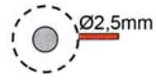
4	Protected against solid objects whose diameter is greater than or equal to 1mm.	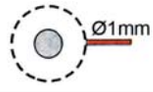
5	Protected against dust.	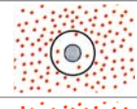
6	Dustproof.	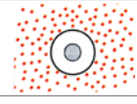

2nd digit (Protection against water)

IP		Test
0	No protection.	
1	Protected against drops of water falling vertically.	
2	Protected against drops of water falling vertically with the covering inclined, at most, at 15°.	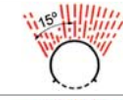
3	Protected against rain up to 60° from the vertical.	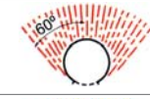
4	Protected against priming.	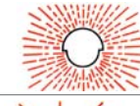
5	Protected against jets of water from all directions.	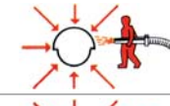
6	Protected against strong jets of water similar to a sea wave.	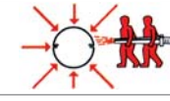
7	Protected against the effects of temporary immersion between 15cm to 1m.	
8	Protected against the effects of constant immersion in water under pressure.	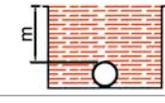

2. Protection index against the mechanical shocks (IK)

Protection degree of the enclosures of the electrical equipments in accordance with the **EN 50102** Standard.

IK	Energy of impact Joule	Used Mass Kg
00	0	0
01	0,15	0,2
02	0,20	0,2
03	0,35	0,2
04	0,50	0,2
05	0,70	0,2
06	1	0,5
07	2	0,5
08	5	1,7
09	10	5
10	20	5

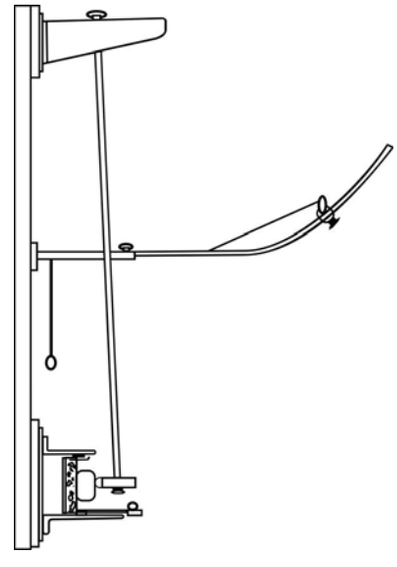

EFAPEL

The mark, when placed on a product, guarantees its conformity with all the appliable standards, and guarantees that the product was produced by a manufacturer who has an manufacturing production control system.

CERTIF

Product Certification (**Portugal**)

Verband Deutscher Elektrotechniker

Product Certification (**Germany**)

AFNOR - LCIE

Laboratoire Central des Industries Électriques (**France**)

KEMA Quality B. V.

Product Certification (**The Nederlands**)

SGS Bergium N. V. - CEBEC

Product Certification (**Belgium**)

Underwriters Laboratories

Product Certification (**EUA**)

INTERTEK ETL SEMKO

Product Certification (**Sweden**)

GOSSTANDART RUSSIA

Product Certification (**Russia**)

UKRSEPRO

Product Certification (**Ucraine**)

MARK OF CONFORMITY TO THE EUROPEAN COMMUNITY DIRECTIVES APPLIABLE TO THE PRODUCT

MANUFACTURER

The CE mark, as established by 2006/95/CE (Low Voltage) and 2004/108/CE (Electromagnetic Compatibility) Directives, shows that the manufacturer fulfils the duties required relating to equipment compliance with the appliable Directives of the European Community Council.
All the currently commercialised EFAPEL products are under CE mark, except for:

- 16A (250V) Sockets;
- Music Sockets;
- 12V Switches;
- Plastic Fittings.

PRODUCT CERTIFICATIONS

10 Series			
10010 C	10048 A	10089	10962 A
10010 F	10050 C	10090 C	10963 A
10011 A	10050 F	10091 A	10964 A
10012 A	10051 A	10092 A	10965 A
10013 A	10052 A	10093 A	10966 A
10014 A	10053 A	10094 A	10967 A
10015 A	10054 A	10095 A	10968 A
10016 A	10055 A	10096 A	10972 A
10017 A	10056 A	10098 A	10975 A
10018 A	10057 A	10099	10976 A
10020 C	10058 A	10100 C	10981 A
10020 F	10060 C	10101 A	10984 A
10021 A	10060 F	10102 A	10985 A
10022 A	10061 A	10104 A	10986 A
10023 A	10062 A	10105 A	10987 A
10024 A	10063 A	10106 A	10988 A
10025 A	10064 A	10107 A	10989 A
10026 A	10065 A	10108 A	10991 A
10027 A	10066 A	10109 A	10993 A
10028 A	10067 A	10140 C	10998 A
10030 C	10068 A	10141 A	
10030 F	10070 C	10142 A	
10031 A	10071 A	10143 A	
10032 A	10072 A	10144 A	
10033 A	10073 A	10145 A	
10034 A	10074 A	10146 A	
10035 A	10075 A	10147 A	
10036 A	10076 A	10148 A	
10037 A	10077 A	10149 A	
10038 A	10078 A	10150 C	
10040 C	10079 A	10150 F	
10040 F	10080 C	10160 C	
10041 A	10081 A	10160 F	
10042 A	10082 A	10170 C	
10043 A	10083 A	10951 A	
10044 A	10084 A	10952 A	
10045 A	10085 A	10953 A	
10046 A	10086 A	10954 A	
10047 A	10088 A	10961 A	

13 Series	
13010 C	13074 A
13012 A	13075 A
13013 A	13076 A
13014 A	13080 C
13015 A	13082 A
13016 A	13083 A
13020 C	13084 A
13022 A	13085 A
13023 A	13086 A
13024 A	
13025 A	
13026 A	
13030 C	
13032 A	
13033 A	
13034 A	
13035 A	
13036 A	
13040 C	
13042 A	
13043 A	
13044 A	
13045 A	
13046 A	
13050 C	
13052 A	
13053 A	
13054 A	
13055 A	
13056 A	
13060 C	
13062 A	
13063 A	
13064 A	
13065 A	
13066 A	
13070 C	
13072 A	
13073 A	

16 Series	
16010 C	16054 A
16011 A	16055 A
16012 A	16056 A
16013 A	16060 C
16014 A	16061 A
16015 A	16062 A
16016 A	16063 A
16020 C	16064 A
16021 A	16065 A
16022 A	16066 A
16023 A	16971 A
16024 A	16972 A
16025 A	
16026 A	
16030 C	
16031 A	
16032 A	
16033 A	
16034 A	
16035 A	
16026 A	
16030 C	
16031 A	
16032 A	
16033 A	
16034 A	
16035 A	
16036 A	
16040 C	
16041 A	
16042 A	
16043 A	
16044 A	
16045 A	
16046 A	
16050 C	
16051 A	
16052 A	
16053 A	

MEC 21
21011
21012
21013
21021
21023
21031
21051
21052
21061
21065
21071
21072
21073
21075
21088
21091
21092
21101
21103
21110
21111
21121
21130
21131
21151
21152
21155
21173
21174
21211
21281
21283
21290
21291
21301
21302
21303
21351
21352

2600 Series

26011 C
26051 C
26061 C
26071 C
26101 C
26121 C
26131 C
26132 C
26157 C
26158 C

3700 Series

37011 C
37012 C
37013 C
37051 C
37061 C
37071 C
37072 C
37073 C
37101 C
37111 C
37112 C
37121 C
37122 C
37131 C
37132 C
37151 C
37152 C
37157 C
37158 C
37201 C
37281 C
37290 C

QUADRO 45

45111 S
45112 S
45116 S
45117 S
45131 S
45132 S
45136 S
45137 S

47 Series

47011 S
47012 S
47013 S
47051 S
47052 S
47061 S
47071 S
47072 S
47073 S
47101 S
47112 S
47121 S
47122 S
47131 S
47132 S
47151 S
47152 S
47155 S
47201 S
47281 S
47290 S

WATERPROOF 48

48011 C
48012 C
48013 C
48051 C
48052 C
48061 C
48071 C
48072 C
48073 C
48101 C
48112 C
48122 C
48131 C
48132 C
48151 C
48152 C
48281 C
48283 C
48290 C
48361 C
48362 C
48861 C
48862 C
48865 C
48866 C

APOLO 5000

50135 C
50138 C
50139 C
50211 C
50321 C
50322 C
50331 C
50332 C

Sirius 70

70135 C
70138 C
70139 C
70211 C
70321 C
70322 C
70331 C
70332 C

Accessories

81211
81221

LOGUS 90

90135 C
90138 C
90139 C
90211 C
90331 C
90332 C

MEC 21

21011
21012
21013
21021
21023
21051
21052
21061
21071
21072
21073
21101
21130
21131
21151
21152
21155
21281
21283
21290
21291

3700 Series

37011 C
37012 C
37071 C
37101 C
37131 C
37132 C
37151 C
37157 C
37158 C
37290 C

QUADRO 45

45131 S
45132 S

47 Series

47011 S
47012 S
47061 S
47071 S
47101 S
47131 S
47132 S
47151 S
47152 S
47281 S

WATERPROOF 48

48011 C
48012 C
48013 C
48051 C
48052 C
48061 C
48071 C
48072 C
48073 C
48101 C
48131 C
48151 C
48152 C
48281 C
48283 C
48290 C
48861 C
48862 C

PRODUCT CERTIFICATIONS

NF

MEC 21
21011
21012
21013
21021
21023
21051
21052
21061
21071
21072
21073
21101
21110
21111
21121
21151
21152
21155
21281
21283
21290
21291

3700 Series
37011 C
37012 C
37013 C
37051 C
37061 C
37071 C
37072 C
37073 C
37101 C
37112 C
37122 C
37151 C
37157 C
37158 C
37290 C

QUADRO 45
45112 S

47 Series
47011 S
47012 S
47013 S
47051 S
47061 S
47071 S
47072 S
47073 S
47101 S
47151 S
47281 S
47290 S

WATERPROOF 48
48011 C
48012 C
48013 C
48051 C
48052 C
48061 C
48071 C
48072 C
48073 C
48101 C
48112 C
48151 C
48152 C
48281 C
48283 C
48290 C

KEMA KEUR

MEC 21
21011
21012
21013
21021
21023
21051
21052
21061
21071
21072
21073
21091
21092
21101
21130
21131
21151
21152
21155
21281
21283
21290
21291

47 Series
47011 S
47012 S
47013 S
47051 S
47052 S
47061 S
47071 S
47072 S
47073 S
47101 S
47131 S
47132 S
47151 S
47152 S
47155 S
47281 S
47290 S

APOLO 5000
50183 C
50184 C
50343 C
50344 C

Sirius 70
70183 C
70184 C

LOGUS 90
90183 C
90184 C
90343 C
90344 C

CEBEC

MEC 21
21011
21012
21013
21021
21023
21051
21052
21061
21071
21072
21073
21101
21110
21111
21151
21152
21155
21281
21283
21290
21291

47 Series
47011 S
47012 S
47013 S
47051 S
47052 S
47061 S
47071 S
47072 S
47073 S
47101 S
47112 S
47151 S
47152 S
47155 S
47281 S
47290 S

WATERPROOF 48
48011 C
48012 C
48013 C
48051 C
48052 C
48061 C
48071 C
48072 C
48073 C
48101 C
48112 C
48151 C
48152 C
48281 C
48283 C
48290 C

UL LISTED

MEC 21
21975
21978
21980

MODUS 55					
55101 1BS	55102 3BU	55103 6CS	55106 2DS	55110 3DU	55116 5CP
55101 1BU	55102 3CS	55104 1BS	55106 2DU	55110 4BS	55116 6BS
55101 1CS	55102 3CU	55104 1BU	55106 3BS	55110 4BU	55116 6CS
55101 1CU	55102 3DS	55104 1CS	55106 3BU	55110 4CP	55120 1BS
55101 1DS	55102 3DU	55104 1CU	55106 3CP	55110 4CS	55120 1BU
55101 1DU	55102 4BS	55104 1DS	55106 3CS	55110 4CU	55120 1CP
55101 2BS	55102 4BU	55104 1DU	55106 3CU	55110 4DS	55120 1CS
55101 2BU	55102 4CS	55104 2BS	55106 3DS	55110 4DU	55120 1CU
55101 2CS	55102 4CU	55104 2BU	55106 3DU	55110 5CP	55120 1DS
55101 2CU	55102 4DS	55104 2CS	55106 4BS	55110 6BS	55120 1DU
55101 2DS	55102 4DU	55104 2CU	55106 4BU	55110 6CS	55120 2BS
55101 2DU	55102 5CP	55104 2DS	55106 4CP	55116 1BS	55120 2BU
55101 3BS	55102 6BS	55104 2DU	55106 4CS	55116 1BU	55120 2CP
55101 3BU	55102 6CS	55104 3BS	55106 4CU	55116 1CP	55120 2CS
55101 3CS	55103 1BS	55104 3BU	55106 4DS	55116 1CS	55120 2CU
55101 3CU	55103 1BU	55104 3CS	55106 4DU	55116 1CU	55120 2DS
55101 3DS	55103 1CS	55104 3CU	55106 5CP	55116 1DS	55120 2DU
55101 3DU	55103 1CU	55104 3DS	55106 6BS	55116 1DU	55120 3BS
55101 4BS	55103 1DS	55104 3DU	55106 6CS	55116 2BS	55120 3BU
55101 4BU	55103 1DU	55104 4BS	55110 1BS	55116 2BU	55120 3CP
55101 4CS	55103 2BS	55104 4BU	55110 1BU	55116 2CP	55120 3CS
55101 4CU	55103 2BU	55104 4CS	55110 1CP	55116 2CS	55120 3CU
55101 4DS	55103 2CS	55104 4CU	55110 1CS	55116 2CU	55120 3DS
55101 4DU	55103 2CU	55104 4DS	55110 1CU	55116 2DS	55120 3DU
55101 6BS	55103 2DS	55104 4DU	55110 1DS	55116 2DU	55120 4BS
55101 6CS	55103 2DU	55104 6BS	55110 1DU	55116 3BS	55120 4BU
55102 1BS	55103 3BS	55104 6CS	55110 2BS	55116 3BU	55120 4CP
55102 1BU	55103 3BU	55106 1BS	55110 2BU	55116 3CP	55120 4CS
55102 1CS	55103 3CS	55106 1BU	55110 2CP	55116 3CS	55120 4CU
55102 1CU	55103 3CU	55106 1CP	55110 2CS	55116 3CU	55120 4DS
55102 1DS	55103 3DS	55106 1CS	55110 2CU	55116 3DS	55120 4DU
55102 1DU	55103 3DU	55106 1CU	55110 2DS	55116 3DU	55120 5CP
55102 2BS	55103 4BS	55106 1DS	55110 2DU	55116 4BS	55120 6BS
55102 2BU	55103 4BU	55106 1DU	55110 3BS	55116 4BU	55120 6CS
55102 2CS	55103 4CS	55106 2BS	55110 3BU	55116 4CP	55125 1BS
55102 2CU	55103 4CU	55106 2BU	55110 3CP	55116 4CS	55125 1BU
55102 2DS	55103 4DS	55106 2CP	55110 3CS	55116 4CU	55125 1CP
55102 2DU	55103 4DU	55106 2CS	55110 3CU	55116 4DS	55125 1CS
55102 3BS	55103 6BS	55106 2CU	55110 3DS	55116 4DU	55125 1CU

PRODUCT CERTIFICATIONS

MODUS 55				
55125 1DS	55132 2DU	55140 4BS	55150 6CP	55225 2DA
55125 1DU	55132 3BS	55140 4BU	55150 6CS	55225 2DC
55125 2BS	55132 3BU	55140 4CP	55163 1BS	55225 2EC
55125 2BU	55132 3CP	55140 4CS	55163 1BU	55225 4BA
55125 2CP	55132 3CS	55140 4CU	55163 1CP	55225 4BC
55125 2CS	55132 3CU	55140 4DS	55163 1CS	55225 4DA
55125 2CU	55132 3DS	55140 4DU	55163 1CU	55225 4DC
55125 2DS	55132 3DU	55140 6BS	55163 1DS	55225 4EC
55125 2DU	55132 4BS	55140 6CP	55163 1DU	55240 2BA
55125 3BS	55132 4BU	55140 6CS	55163 2BS	55240 2BC
55125 3BU	55132 4CP	55150 1BS	55163 2BU	55240 2DA
55125 3CP	55132 4CS	55150 1BU	55163 2CP	55240 2DC
55125 3CS	55132 4CU	55150 1CP	55163 2CS	55240 2EC
55125 3CU	55132 4DS	55150 1CS	55163 2CU	55240 4BA
55125 3DS	55132 4DU	55150 1CU	55163 2DS	55240 4BC
55125 3DU	55132 5CP	55150 1DS	55163 2DU	55240 4DA
55125 4BS	55132 6BS	55150 1DU	55163 3BS	55240 4DC
55125 4BU	55132 6CS	55150 2BS	55163 3BU	55240 4EC
55125 4CP	55140 1BS	55150 2BU	55163 3CP	55263 2BA
55125 4CS	55140 1BU	55150 2CP	55163 3CS	55263 2BC
55125 4CU	55140 1CP	55150 2CS	55163 3CU	55263 2DA
55125 4DS	55140 1CS	55150 2CU	55163 3DS	55263 2DC
55125 4DU	55140 1CU	55150 2DS	55163 3DU	55263 2EC
55125 5CP	55140 1DS	55150 2DU	55163 4BS	55263 4BA
55125 6BS	55140 1DU	55150 3BS	55163 4BU	55263 4BC
55125 6CS	55140 2BS	55150 3BU	55163 4CP	55263 4DA
55132 1BS	55140 2BU	55150 3CP	55163 4CS	55263 4DC
55132 1BU	55140 2CP	55150 3CS	55163 4CU	55263 4EC
55132 1CP	55140 2CS	55150 3CU	55163 4DS	
55132 1CS	55140 2CU	55150 3DS	55163 4DU	
55132 1CU	55140 2DS	55150 3DU	55163 6BS	
55132 1DS	55140 2DU	55150 4BS	55163 6CP	
55132 1DU	55140 3BS	55150 4BU	55163 6CS	
55132 2BS	55140 3BU	55150 4CP	55216 2AC	
55132 2BU	55140 3CP	55150 4CS	55216 2BA	
55132 2CP	55140 3CS	55150 4CU	55216 2BC	
55132 2CS	55140 3CU	55150 4DS	55225 2AC	
55132 2CU	55140 3DS	55150 4DU	55225 2BA	
55132 2DS	55140 3DU	55150 6BS	55225 2BC	

Ref.	Page	Ref.	Page	Ref.	Page	Ref.	Page
10XXX		10038 A	111; 116	10064 A	114	10096 A	123
10010 C	103; 114; 116; 120	10040 C	103; 114; 116; 120	10065 A	115	10098 A	123
10010 F	103; 114; 116; 120	10040 F	103; 114; 116; 120	10066 A	115	10099	123; 127
10011 A	114	10041 A	114	10067 A	89; 116	10100 C	118; 121
10012 A	114	10042 A	114	10068 A	111; 116	10101 A	118
10013 A	114	10043 A	114	10070 C	102; 103; 114; 116; 120	10102 A	118
10014 A	114	10044 A	114	10071 A	114	10104 A	118
10015 A	115	10045 A	115	10072 A	114	10105 A	119
10016 A	115	10046 A	115	10073 A	114	10106 A	119
10017 A	89; 116	10047 A	89; 116	10074 A	114	10107 A	89; 119
10018 A	111; 116	10048 A	111; 116	10075 A	115	10108 A	119
10020 C	103; 114; 116; 120	10050 C	103; 114; 116; 120	10076 A	115	10109 A	119
10020 F	103; 114; 116; 120	10050 F	103; 114; 116; 120	10077 A	89; 116	10110 C	118; 121
10021 A	114	10051 A	114	10078 A	111; 116	10113 A	118
10022 A	114	10051 D	115	10079 A	111; 116	10114 A	118
10023 A	114	10052 A	114	10080 C	102; 122; 124	10115 A	118
10024 A	114	10052 D	115	10081 A	122	10117 A	119
10025 A	115	10053 A	114	10082 A	122	10120 C	118; 121
10026 A	115	10053 D	115	10083 A	122	10123 A	118
10027 A	89; 116	10054 A	114	10084 A	122	10124 A	118
10028 A	111; 116	10055 A	115	10085 A	122	10125 A	118
10030 C	103; 114; 116; 120	10056 A	115	10086 A	123	10127 A	119
10030 F	103; 114; 116; 120	10056 D	115	10088 A	123	10140 C	102; 103; 114; 116; 120
10031 A	114	10057 A	89; 116	10089	123	10141 A	114
10032 A	114	10058 A	111; 116	10090 C	102; 122; 124	10141 D	115
10033 A	114	10060 C	114; 116; 120	10091 A	122	10142 A	114
10034 A	114	10060 F	114; 116; 120	10092 A	122	10142 D	115
10035 A	115	10061 A	114	10093 A	122	10143 A	114
10036 A	115	10062 A	114	10094 A	122	10143 D	115
10037 A	89; 116	10063 A	114	10095 A	122	10144 A	114

REFERENCE INDEX

Ref.	Page
10XXX	
10145 A	115
10146 A	115
10146 D	115
10147 A	89; 116
10148 A	111; 116
10149 A	111; 116
10150 C	103; 114; 116; 120
10150 F	103; 114; 116; 120
10160 C	103; 114; 116; 120
10160 F	103; 114; 116; 120
10170 C	102; 103; 114; 116; 120
10951 A	100; 102; 127
10952 A	100; 102; 123; 127
10953 A	100; 102; 127
10954 A	100; 102; 123; 127
10961 A	101; 117
10962 A	101; 117
10963 A	101; 117
10964 A	101; 117
10965 A	101; 117
10966 A	101; 117
10967 A	101; 117
10968 A	101; 117
10971 A	123; 127
10972 A	117; 118
10975 A	37; 117; 119
10976 A	19; 117; 119
10977 D	115
10981 A	56; 117; 119
10984 A	123; 127
10985 A	123; 127
10986 A	100; 102; 123; 127
10987 A	123; 127
10988 A	101; 102; 117
10989 A	101; 102; 117
10991 A	115
10993 A	115
10997 A	119
10998 A	115
10999 A	119
13XXX	
13010 C	130
13012 A	130
13013 A	130
13014 A	130
13015 A	130
13016 A	130
13020 C	130
13022 A	130
13023 A	130
13024 A	130
13025 A	130
13026 A	130
13030 C	130
13032 A	130
13033 A	130
13034 A	130
13035 A	130
13036 A	130
13040 C	130
13042 A	130
13043 A	130
13044 A	130
13045 A	130
13046 A	130
13050 C	130
13052 A	130
13053 A	130
13054 A	130
13055 A	130
13056 A	130
13060 C	130
13062 A	130
13063 A	130
13064 A	130
13065 A	130
13066 A	130
13070 C	130
13072 A	130
13073 A	130
13074 A	130
13075 A	130
13076 A	130
13080 C	130
13082 A	130
13083 A	130
13084 A	130
13085 A	130
13086 A	130
14XXX	
14010 C	132
14020 C	132
14030 C	132
14040 C	132
14050 C	132
14060 C	132
14070 C	132
14080 C	132
16XXX	
16010 C	102; 126; 128
16011 A	126
16012 A	126
16013 A	126
16014 A	126
16015 A	126
16016 A	126
16020 C	102; 126; 128
16021 A	126
16022 A	126
16023 A	126
16024 A	126
16025 A	126
16026 A	126
16030 C	102; 126; 128
16031 A	126
16032 A	126
16033 A	126
16034 A	126
16035 A	126

EFAPEL

Ref.	Page	Ref.	Page	Ref.	Page	Ref.	Page
16XXX		21023	8; 26; 44	21155	11; 29; 47	21372	68
16036 A	126	21024	8; 26; 44	21156	11; 29; 47	21373	67
16040 C	102; 126; 129	21031	9; 27; 45	21159	11; 29; 47	21374	68
16041 A	126	21046	9; 27; 45	21162	11; 29; 47	21377	66
16042 A	126	21047	9; 27; 45	21165	11; 29; 47	21378	67
16043 A	126	21051	10; 28; 46	21173	19; 37; 55	21379	66
16044 A	126	21052	10; 28; 46	21174	19; 37; 55	21380	64
16045 A	126	21061	9; 27; 45	21211	13; 31; 49	21385	69
16046 A	126	21065	9; 27; 45	21212	13; 31; 49	21391	65
16050 C	102; 126; 129	21071	9; 27; 45	21220	19; 37; 55	21392	65
16051 A	126	21072	9; 27; 45	21222	19; 37; 55	21393	65
16052 A	126	21073	9; 27; 45	21232	14; 32; 50	21401	8; 26; 44
16053 A	126	21075	10; 28; 46	21233	14; 32; 50	21402	8, 26; 44
16054 A	126	21088	9; 27; 45	21251 S	15; 33; 51	21411	15; 33; 51
16055 A	126	21091	13; 31; 49	21252 S	15; 33; 51	21443	14; 32; 50
16056 A	126	21092	13; 31; 49	21253 S	15; 33; 51	21445	14; 32; 50
16060 C	102; 126; 129	21101	10; 28; 46	21281	12; 30, 48	21453	14; 32, 50
16061 A	126	21103	10; 28; 46	21283	12; 30; 48	21455	14; 32; 50
16062 A	126	21110	18; 36; 54	21290	12; 30; 48	21533	16; 34; 52
16063 A	126	21111	18, 36; 54	21291	12, 30; 48	21534	17; 35; 53
16064 A	126	21121	18; 36; 54	21301	13, 31; 49	21535	17; 35; 53
16065 A	126	21130	18; 36; 54	21302	13; 31; 49	21543	16; 34; 52
16066 A	126	21131	18; 36; 54	21303	13; 31; 49	21544	17; 35; 53
16971 A	127	21140	18; 36; 55	21311	12; 30; 48	21545	17; 35; 53
16972 A	127	21143	18; 36; 55	21312	12; 30; 48	21546	17; 35; 53
21XXX		21150	10; 28; 46	21351	13; 31; 49	21554	16; 34; 52
21011	8; 26; 44	21151	10; 28; 46	21352	13; 31; 49	21555	16; 34; 52
21012	8; 26; 44	21152	11; 29; 47	21360	19; 37; 55	21564	16; 34; 52
21013	8; 26; 44	21153	11; 29; 47	21370	66	21565	16; 34; 52
21021	8; 26; 44	21154	11; 29; 47	21371	68	21581	69

REFERENCE INDEX

Ref.	Page	Ref.	Page	Ref.	Page	Ref.	Page
21XXX		37051 C	85	37453 C	86	45197 S	93
21971	19; 37; 56	37061 C	84	37455 C	86	45232 S	98
21972	136	37071 C	84	37531 C	87	45233 S	98
21975	14; 32; 50; 136	37072 C	84	37532 C	87	45260 C	95
21978	14; 32; 50; 136	37073 C	84	37550 C	87	45261 C	95
21979	136	37101 C	84	**45XXX**		45262 C	95
21980	136	37111 C	88	45046 S	98	45263 C	95
21981	19, 37; 56	37112 C	88	45047 S	98	45264 C	95
21982	19, 37; 56	37121 C	88	45111 S	92	45265 C	95
21985	14; 32; 50; 136	37122 C	88	45112 S	92	45266 C	95
21988	14; 32; 50; 136	37131 C	88	45115 C	94	45267 C	95
21989	19; 37; 56	37132 C	88	45116 S	92	45270 C	94
21999	20; 38; 56	37151 C	85	45117 S	92	45272 C	94
26XXX		37152 C	85	45118 C	94	45273 C	94
26011 C	80	37157 C	85	45131 S	92	45274 C	94
26021 C	80	37158 C	85	45132 S	92	45275 C	94
26051 C	80	37168 C	85	45135 C	93	45276 C	94
26061 C	80	37170 C	88	45136 S	92	45277 C	94
26071 C	80	37201 C	88	45137 S	92	45278 C	94
26101 C	80	37221 C	88	45138 C	93	45311 S	97
26121 C	81	37251 C	86	45140 S	92	45312 S	97
26122 C	81	37252 C	86	45142 S	92	45370 S	99
26131 C	81	37253 C	86	45144 S	92	45371 S	99
26132 C	81	37281 C	85	45190 S	93	45372 S	99
26157 C	80	37290 C	85	45191 S	93	45373 S	99
26158 C	80	37360 C	88	45192 S	93	45374 S	99
37XXX		37411 C	86	45193 S	93	45377 S	99
37011 C	84	37431 C	87	45194 S	93	45378 S	99
37012 C	84	37443 C	86	45195 S	93	45379 S	99
37013 C	84	37445 C	86	45196 S	93	45380 S	98

EFAPEL

Ref.	Page
45XXX	
45385 S	100
45391 S	99
45392 S	99
45393 S	99
45401 S	98
45402 S	98
45447 S	96
45448 S	96
45449 S	96
45533 S	97
45543 S	97
45554 S	97
45555 S	97
45564 S	97
45565 S	97
45970 S	20; 38; 57; 96
45971 S	96
45972 S	95
45975 S	95
45976 S	96
45977 S	96
45978 S	95
45979 S	96
45985 S	96
45988 S	96
45990 A	100; 155
45991	100; 155

Ref.	Page
47XXX	
47011 S	106
47012 S	106
47013 S	106
47051 S	107
47052 S	107
47061 S	106
47071 S	106
47072 S	106
47073 S	106
47101 S	106
47112 S	**110**
47121 S	110
47122 S	110
47131 S	110
47132 S	110
47151 S	107
47152 S	107
47155 S	107
47170 S	110
47201 S	110
47221 S	110
47251 S	108
47252 S	108
47253 S	**108**
47281 S	107
47290 S	107
47360 S	110
47411 S	108
47431 S	109

Ref.	Page
47443 S	108
47445 S	108
47453 S	108
47455 S	108
47531 S	109
47532 S	109
47550 S	109
47993 A	111
48XXX	
48011 C	74
48012 C	74
48013 C	74
48021 C	74
48023 C	74
48051 C	75
48052 C	75
48061 C	74
48071 C	74
48072 C	74
48073 C	74
48101 C	75
48112 C	76
48122 C	76
48131 C	76
48132 C	76
48151 C	75
48152 C	75
48162 C	75
48281 C	75
48283 C	75

Ref.	Page
48290 C	75
48361 C	77
48362 C	77
48461 C	**77**
48861 C	76
48862 C	76
48865 C	76
48866 C	76
48990 A	77
48992 A	77
48994 A	77
48995 A	77
48998 C	77; 100
50XXX	
50046 T	45
50047 T	45
50135 C	58
50138 C	58
50139 C	58
50183 C	59
50184 C	59
50211 C	59
50212 C	59
50311 T	48
50312 T	48
50321 C	58
50322 C	58
50331 C	58
50332 C	58
50343 C	59

REFERENCE INDEX

Ref.	Page	Ref.	Page	Ref.	Page	Ref.	Page
50XXX		50700 T	68	50797 T	44; 47	55101 2DS	146
50344 C	59	50702 T	68	50841 T	55	55101 2DU	148
50351 T	49	50703 T	67	50842 T	55	55101 3BS	147
50401 T	44	50704 T	68	50843 T	55	55101 3BU	148
50442 S	50	50705 T	69	50851 T	65	55101 3CS	147
50448 S	51	50707 T	66	50852 T	65	55101 3CU	148
50449 S	51	50708 T	67	50853 T	65	55101 3DS	147
50450 S	57	50709 T	66	50881 T	56	55101 3DU	148
50601 T	44; 45; 46	50710 T	69	50901 T	61	55101 4BS	**147**
50602 T	44; 45; 46; 47	50712 T	51	50902 T	61	55101 4BU	149
50603 T	47	50713 T	55	50903 T	61	55101 4CS	147
50604 T	46	50715 T	66	50910 T	**60**	55101 4CU	149
50605 T	46	50718 T	51	50921 T	60	55101 4DS	147
50606 T	46	50721 T	49	50922 T	60	55101 4DU	149
50607 T	46	50731 T	45	50931 T	60	55101 6BS	146
50608 T	44	50740 T	50	50932 T	61	55101 6CS	146
50611 T	45; 46; 47	50741 T	49	50941 T	61	55102 1BS	146
50612 T	48	50742 T	50	50942 T	61	55102 1BU	148
50613 T	48	50751 T	50	50961 T	61	55102 1CS	146
50621 T	54	50761 T	49	**55XXX**		55102 1CU	148
50622 T	54	50762 T	49	55101 1BS	146	55102 1DS	146
50631 T	54	50770 T	53	55101 1BU	148	55102 1DU	148
50632 T	54	50773 T	53	55101 1CS	146	55102 2BS	146
50634 T	54	50774 T	53	55101 1CU	148	55102 2BU	148
50652 T	54	50775 T	52	55101 1DS	146	55102 2CS	146
50654 T	54	50776 T	52	55101 1DU	148	55102 2CU	148
50661 T	45	50781 T	55	55101 2BS	146	55102 2DS	146
50670 T	64	50794 T	47	55101 2BU	148	55102 2DU	148
50671 T	55	50795 T	47	55101 2CS	146	55102 3BS	147
50677 T	55	50796 T	47	55101 2CU	148	55102 3BU	148

EFAPEL

Ref.	Page	Ref.	Page	Ref.	Page	Ref.	Page
55XXX		55103 3DS	147	55104 4CS	147	55106 4CS	147
55102 3CS	147	55103 3DU	148	55104 4CU	149	55106 4CU	149
55102 3CU	148	55103 4BS	147	55104 4DS	147	55106 4DS	147
55102 3DS	147	55103 4BU	149	55104 4DU	149	55106 4DU	149
55102 3DU	148	55103 4CS	147	55104 6BS	146	55106 5CP	145
55102 4BS	147	55103 4CU	149	55104 6CS	146	55106 6BS	146
55102 4BU	149	55103 4DS	147	55106 1BS	146	55106 6CS	146
55102 4CS	147	55103 4DU	149	55106 1BU	148	55110 1BS	146
55102 4CU	149	55103 6BS	146	55106 1CP	145	55110 1BU	**148**
55102 4DS	147	55103 6CS	146	55106 1CS	146	55110 1CP	145
55102 4DU	149	55104 1BS	146	55106 1CU	148	55110 1CS	146
55102 5CP	145	55104 1BU	148	55106 1DS	146	55110 1CU	148
55102 6BS	146	55104 1CS	146	55106 1DU	148	55110 1DS	146
55102 6CS	146	55104 1CU	148	55106 2BS	146	55110 1DU	148
55103 1BS	146	55104 1DS	146	55106 2BU	148	55110 2BS	146
55103 1BU	148	55104 1DU	148	55106 2CP	145	55110 2BU	148
55103 1CS	146	55104 2BS	146	55106 2CS	146	55110 2CP	145
55103 1CU	148	55104 2BU	148	55106 2CU	148	55110 2CS	146
55103 1DS	146	55104 2CS	146	55106 2DS	146	55110 2CU	148
55103 1DU	148	55104 2CU	148	55106 2DU	148	55110 2DS	146
55103 2BS	146	55104 2DS	146	55106 3BS	147	55110 2DU	148
55103 2BU	148	55104 2DU	148	55106 3BU	148	55110 3BS	147
55103 2CS	146	55104 3BS	147	55106 3CP	145	55110 3BU	148
55103 2CU	148	55104 3BU	148	55106 3CS	147	55110 3CP	145
55103 2DS	146	55104 3CS	147	55106 3CU	148	55110 3CS	147
55103 2DU	148	55104 3CU	148	55106 3DS	147	55110 3CU	148
55103 3BS	147	55104 3DS	147	55106 3DU	148	55110 3DS	147
55103 3BU	148	55104 3DU	148	55106 4BS	147	55110 3DU	148
55103 3CS	147	55104 4BS	147	55106 4BU	149	55110 4BS	147
55103 3CU	148	55104 4BU	149	55106 4CP	145	55110 4BU	149

REFERENCE INDEX

Ref.	Page	Ref.	Page	Ref.	Page	Ref.	Page
55XXX		55116 4BS	147	55120 3DU	148	55125 3DS	147
55110 4CP	145	55116 4BU	149	55120 4BS	147	55125 3DU	148
55110 4CS	147	55116 4CP	145	55120 4BU	149	55125 4BS	147
55110 4CU	149	55116 4CS	147	55120 4CP	145	55125 4BU	149
55110 4DS	147	55116 4CU	149	55120 4CS	147	55125 4CP	145
55110 4DU	149	55116 4DS	147	55120 4CU	149	55125 4CS	147
55110 5CP	145	55116 4DU	149	55120 4DS	147	55125 4CU	149
55110 6BS	146	55116 5CP	145	55120 4DU	149	55125 4DS	147
55110 6CS	146	55116 6BS	146	55120 5CP	145	55125 4DU	149
55116 1BS	146	55116 6CS	146	55120 6BS	146	55125 5CP	145
55116 1BU	148	55120 1BS	146	55120 6CS	146	55125 6BS	146
55116 1CP	145	55120 1BU	148	55125 1BS	146	55125 6CS	146
55116 1CS	146	55120 1CP	145	55125 1BU	148	55132 1BS	146
55116 1CU	148	55120 1CS	146	55125 1CP	145	55132 1BU	148
55116 1DS	146	55120 1CU	148	55125 1CS	146	55132 1CP	145
55116 1DU	148	55120 1DS	146	55125 1CU	148	55132 1CS	146
55116 2BS	146	55120 1DU	148	55125 1DS	146	55132 1CU	148
55116 2BU	148	55120 2BS	146	55125 1DU	148	55132 1DS	146
55116 2CP	145	55120 2BU	148	55125 2BS	146	55132 1DU	148
55116 2CS	146	55120 2CP	145	55125 2BU	148	55132 2BS	146
55116 2CU	148	55120 2CS	146	55125 2CP	145	55132 2BU	148
55116 2DS	146	55120 2CU	148	55125 2CS	146	55132 2CP	145
55116 2DU	148	55120 2DS	146	55125 2CU	148	55132 2CS	146
55116 3BS	147	55120 2DU	148	55125 2DS	146	55132 2CU	148
55116 3BU	148	55120 3BS	147	55125 2DU	148	55132 2DS	146
55116 3CP	145	55120 3BU	148	55125 3BS	147	55132 2DU	148
55116 3CS	147	55120 3CP	145	55125 3BU	148	55132 3BS	147
55116 3CU	148	55120 3CS	147	55125 3CP	145	55132 3BU	148
55116 3DS	147	55120 3CU	148	55125 3CS	147	55132 3CP	145
55116 3DU	148	55120 3DS	147	55125 3CU	148	55132 3CS	147

EFAPEL

Ref.	Page	Ref.	Page	Ref.	Page	Ref.	Page
55XXX		55140 3CP	145	55150 3BU	148	55163 3BS	147
55132 3CU	148	55140 3CS	147	55150 3CP	145	55163 3BU	148
55132 3DS	147	55140 3CU	148	55150 3CS	147	55163 3CP	145
55132 3DU	148	55140 3DS	147	55150 3CU	148	55163 3CS	147
55132 4BS	147	55140 3DU	148	55150 3DS	147	55163 3CU	148
55132 4BU	149	55140 4BS	147	55150 3DU	148	55163 3DS	147
55132 4CP	145	55140 4BU	149	55150 4BS	147	55163 3DU	148
55132 4CS	147	55140 4CP	145	55150 4BU	149	55163 4BS	147
55132 4CU	149	55140 4CS	147	55150 4CP	145	55163 4BU	149
55132 4DS	147	55140 4CU	149	55150 4CS	147	55163 4CP	145
55132 4DU	149	55140 4DS	147	55150 4CU	149	55163 4CS	147
55132 5CP	145	55140 4DU	149	55150 4DS	147	55163 4CU	149
55132 6BS	146	55140 6BS	146	55150 4DU	149	55163 4DS	147
55132 6CS	146	55140 6CP	145	55150 6BS	146	55163 4DU	149
55140 1BS	146	55140 6CS	146	55150 6CP	145	55163 6BS	146
55140 1BU	148	55150 1BS	146	55150 6CS	146	55163 6CP	145
55140 1CP	145	55150 1BU	148	55163 1BS	146	55163 6CS	146
55140 1CS	146	55150 1CP	145	55163 1BU	148	55216 2AC	150
55140 1CU	148	55150 1CS	146	55163 1CP	145	55216 2BA	150
55140 1DS	146	55150 1CU	148	55163 1CS	146	55216 2BC	150
55140 1DU	148	55150 1DS	146	55163 1CU	148	55225 2AC	150
55140 2BS	146	55150 1DU	148	55163 1DS	146	55225 2BA	150
55140 2BU	148	55150 2BS	146	55163 1DU	148	55225 2BC	150
55140 2CP	145	55150 2BU	148	55163 2BS	146	55225 2DA	150
55140 2CS	146	55150 2CP	145	55163 2BU	148	55225 2DC	150
55140 2CU	148	55150 2CS	146	55163 2CP	145	55225 2EC	150
55140 2DS	146	55150 2CU	148	55163 2CS	146	55225 4BA	150
55140 2DU	148	55150 2DS	146	55163 2CU	148	55225 4BC	150
55140 3BS	147	55150 2DU	148	55163 2DS	146	55225 4DA	150
55140 3BU	148	55150 3BS	147	55163 2DU	148	55225 4DC	150

REFERENCE INDEX

Ref.	Page	Ref.	Page	Ref.	Page	Ref.	Page
55XXX		55501 ANL	153	55540 1IT	152	55580 4IT	152
55225 4EC	150	55501 DIG	153	55540 2IT	152	**70XXX**	
55240 2BA	150	55502 CTR	153	55540 3IT	152	70046 T	27
55240 2BC	150	55505 CMP	153	55540 4IT	152	70047 T	27
55240 2DA	150	55508 TRF	153	55560 LAR	152	70135 C	39
55240 2DC	150	55510 SPA	153	55560 VRD	152	70138 C	39
55240 2EC	150	55511 CBR	155	55560 VRM	152	70139 C	39
55240 4BA	150	55511 CLR	155	55563 1IT	152	70183 C	39
55240 4BC	150	55511 CVM	156	55563 1LG	155	70184 C	39
55240 4DA	150	55512 CBR	155	55563 1PD	154	70211 C	39
55240 4DC	150	55512 CLR	155	55563 1PF	154	70212 C	39
55240 4EC	150	55512 CVM	155	55563 1PP	154	70311 T	30
55263 2BA	150	55516 CVM	155	55563 1TP	154	70312 T	30
55263 2BC	150	55517 CVM	155	55563 1WP	154	70321 C	39
55263 2DA	150	55525 1IT	152	55563 2IT	152	70322 C	39
55263 2DC	150	55525 2IT	152	55563 2PD	154	70331 C	39
55263 2EC	150	55525 3IT	152	55563 2PF	154	70332 C	39
55263 4BA	150	55525 4IT	152	55563 2TP	154	70351 T	31
55263 4BC	150	55531 CBR	155	55563 3IT	152	70401 T	26
55263 4DA	150	55531 CLR	155	55563 3PD	154	70442 S	32
55263 4DC	150	55531 CVM	155	55563 3PF	154	70448 S	33
55263 4EC	150	55532 1IT	152	55563 3TP	154	70449 S	33
55410 1DC	151	55532 2IT	152	55563 4IT	152	70450 S	38
55420 1DC	151	55532 3IT	152	55563 4PD	154	70601 T	26; 27, 28
55440 1DC	151	55532 4IT	152	55563 4PF	154	70602 T	26; 27; 28; 29
55460 1DC	151	55532 CBR	155	55563 4TP	154	70603 T	29
55500 1IT	152	55532 CLR	155	55565 CMP	153	70604 T	28
55500 2IT	152	55532 CVM	155	55580 1IT	152	70605 T	28
55500 3IT	152	55536 CVM	155	55580 2IT	152	70606 T	28
55500 4IT	152	55537 CVM	155	55580 3IT	152	70607 T	28

EFAPEL

Ref.	Page	Ref.	Page	Ref.	Page	Ref.	Page
70XXX		70731 T	27	70931 T	41	81054	158
70608 T	26	70740 T	32	70932 T	41	81055	158
70611 T	27; 28; 29	70741 T	31	70941 T	41	81062	158
70612 T	30	70742 T	32	70942 T	41	81063	158
70613 T	30	70751 T	32	70961 T	41	81064	158
70621 T	36	70761 T	31	**75XXX**		81065	158
70622 T	36	70762 T	31	75021 C	70	81082	158
70631 T	36	70770 T	35	75022 C	70	81083	158
70632 T	36	70773 T	35	75023 C	70	81084	158
70634 T	36	70774 T	35	75032	71	81102	159
70652 T	36	70775 T	34	75052	64	81103	159
70654 T	36	70776 T	34	75053	64	81104	159
70661 T	27	70781 T	37	75081 C	70	81201	159
70670 T	64	70794 T	29	75082 C	70	81211	159
70671 T	37	70795 T	29	75083 C	70	81221	159
70677 T	37	70796 T	29	75104 C	70	81251	159
70700 T	68	70797 T	26; 29	75105 C	70	81501	159
70702 T	68	70841 T	36	75106 C	70	81502	159
70703 T	67	70842 T	36	75983	71	81503	159
70704 T	68	70843 T	36	75984	71	81504	159
70705 T	69	70851 T	65	75985	71; 100; 161	81505	160
70707 T	66	70852 T	65	75986	71	81506	160
70708 T	67	70853 T	65	75999 A	71	81507	160
70709 T	66	70881 T	38	**81XXX**		81511	20; 38; 57; 161
70710 T	69	70901 T	41	81011	158	81512	20; 38; 57; 161
70712 T	33	70902 T	41	81012	**158**	81601	160
70713 T	37	70903 T	41	81018	20; 38; 56; 77; 158	81602	160
70715 T	66	70910 T	40	81019	20; 38; 56; 77; 158	81603	160
70718 T	33	70921 T	40	81052	158	81701	160
70721 T	31	70922 T	40	81053	158	81702	160

REFERENCE INDEX

Ref.	Page	Ref.	Page	Ref.	Page	Ref.	Page
81XXX		82211	15; 33; 51; 136	82593 A	140	90212 C	21
81703	160	82213	15; 33; 51; 136	82595 A	140	90311 T	12
81801	160	82511	138	82601	137	90312 T	12
81802	160	82512	138	82602	137	90331 C	21
81803	161	82521	138	82603	137	90332 C	21
81804	161	82522	138	82611	137	90343 C	21
81805	161	82523	138	82621 A	140	90344 C	21
81806	161	82524	138	82622 A	140	90351 T	13
81807	161	82525	138	82625 A	140	90401 T	8
81808	161	82531	138	82631 A	140	90442 S	14
81901	20; 38; 57; 97; 161	82532	138	82632 A	140	90448 S	15
81902	20; 38; 57; 98; 161	82533	141	82635 A	140	90449 S	15
81950	14; 32; 50; 98; 161	82534	141	82641 A	140	90450 S	20
82XXX		82535	138	82642 A	140	90601 T	8; 9; 10
82011	141	82536	139	82645 A	140	90602 T	8; 9; 10; 11
82012	141	82537	139	82651 A	140	90603 T	11
82013	141	82538	139	82652 A	140	90604 T	10
82024	137	82541	139	82655 A	140	90605 T	10
82025	137	82542	139	82681	138	90606 T	10
82026	137	82543	139	82691	138	90607 T	10
82028	137	82544	139	82692	138	90608 T	8
82029	137	82545	139	**90XXX**		90611 T	9; 10; 11
82032	140	82546	139	90046 T	9	90612 T	12
82035	140	82547	139	90047 T	9	90613 T	12
82042	140	82551	139	90135 C	21	90621 T	18
82045	140	82552	139	90138 C	21	90622 T	18
82052	140	82561	141	90139 C	21	90631 T	18
82055	140	82562	141	90183 C	21	90632 T	18
82064	141	82581	141	90184 C	21	90634 T	18
82210	15; 33; 51; 136	82591 A	140	90211 C	21	90652 T	18

EFAPEL

Ref.	Page
90XXX	
90654 T	18
90661 T	9
90670 T	64
90671 T	19
90677 T	19
90700 T	68
90702 T	68
90703 T	67
90704 T	68
90705 T	69
90707 T	66
90708 T	67
90709 T	66
90710 T	69
90712 T	15
90713 T	19
90715 T	66
90718 T	15
90721 T	13
90731 T	9
90740 T	14
90741 T	13
90742 T	14
90751 T	14
90761 T	13
90762 T	13
90770 T	17
90773 T	17
90774 T	17

Ref.	Page
90775 T	16
90776 T	16
90781 T	19
90794 T	11
90795 T	11
90796 T	11
90797 T	8; 11
90841 T	18
90842 T	18
90843 T	18
90851 T	65
90852 T	65
90853 T	65
90881 T	20
90902 T	23
90903 T	23
90904 T	23
90910 T	22
90920 T	22
90930 T	22
90940 T	23
90950 T	23

EFAPEL®

MADE IN Portugal

- Present **in the electrical market for more than 30 years**, EFAPEL is a company founded in 1978 by local investors and by exclusively **Portuguese capitals**.
- Our working team and force has almost **300 collaborators** who work in **3 modern industrial plants** with a **total manufacturing area of 18.750 m²**.
- We are **certified** in accordance with the:
  - NP EN ISO 9001 Standards (Quality Management System),
  - NP EN ISO 14001 Standards (Environmental Management System) and
  - OHSAS 18001/NP 4397 Standards (Occupational Health and Safety Management System).
- **We develop** and **manufacture** high quality products to be used in **low voltage electrical installations**.
- Our **Team of the Research, Development and Innovation Department** (RDI Department), exclusively dedicate its job and efforts to the research and development of products and solutions that match the needs and requests of our Customers, by keeping in mind always the following three basic directives:
  - Good Quality/Price Ratio;
  - Easy and Quick Installation;
  - Safe and Comfort for the User.
- Our goal is to offer to our Customers a complete range of products that allows them to project and build a complete electrical installation with EFAPEL products.

Where We Are

- We are located in the **beautiful villa of Serpins**, which is 30 Km away from the important city of Coimbra.

EFAPEL®

Our Compromises...

With our Customers

From the beginning, our company policy is based on three essentials pillars:

- **The Product:** By developing and manufacturing high Quality products that match the needs and expectations of our Customers;
- **The Service:** By serving our Customers in the most effective and quick way;
- **The Best Quality/Price Ratio:** By obtaining solutions and services which are the best platform to make good business.

With the Quality and Safety of our Products

- All our products are **developed**, **manufactured** and **tested** in strict accordance with all the related standards. They also respond to the requirements of each country for which they are destined.
- **We guarantee** the **Quality** and the **Safety** of our products from developing to their use by ensuring a **constant supervision** over the Production Processes and a **rigorous Internal Quality Control**.

With the Environment and the Future

- With the intention of promoting the good environmental practices within the overall Community, we encourage our Colleagues, Suppliers and Customers to implement our daily good environmental practices in their day-by-day.
- All the environmental factors and conflicts are systematically identified, controlled and measured in order to guarantee the continuous improvement of EFAPEL environmental behavior and performance.
- The thermoplastic material used in EFAPEL products is 100% recyclable.
- All the carton packages of products, samples, deliveries, etc.; are 100% recyclable.
- We assure the final treatment of the carton packages by a legal contract with the national specialized company – "Ponto Verde".
- We assure the final treatment of the electrical products under the RoHS 2002/95/CE Directive, by a legal contract with the national specialized company - ERP Portugal.

From PORTUGAL to the WORLD

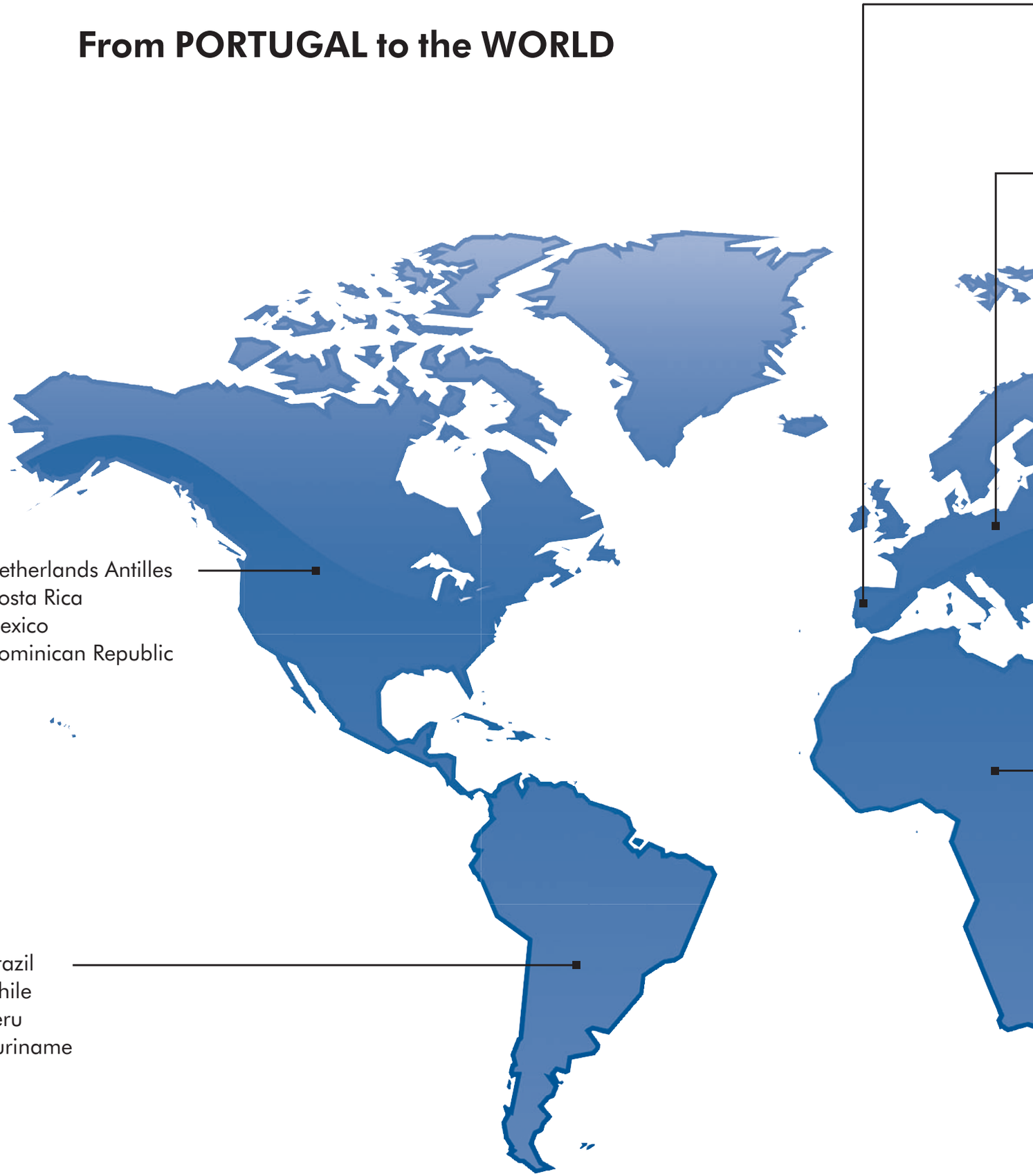

EFAPEL
PORTUGAL

EFAPEL - Serpins	***EFAPEL - Padrão***
40° 9´34″ N	40° 6´48″ N
8° 12´48″ O	8° 17´35″ O

Albania
Germany
Andorra
Austria
Belgium
Belarus
Bulgaria
Canary Islands
Spain
Finland
France
Greece
Holland
Hungary
Italy
Latvia
Lithuania
Luxembourg
Moldova
Poland
Czech Republic
Serbia
Sweden
Switzerland
Ukraine

China
Georgia
Pakistan
Russia
Singapore
Vietnam

South Africa
Angola
Algeria
Benin
Cape Verde
Cameroon
Côte d'Ivoire
Egypt
Ethiopia
Madagascar
Morocco
Mozambique
Nigeria
São Tomé and Príncipe
Tunisia

Saudi Arabia
United Arab Emirates
Iran
Jordan
Lebanon
Syria

EMPRESA CERTIFICADA
apcer
ISO 9001
ISO 14001
OHSAS 18001

CERTIFIED IQNet MANAGEMENT SYSTEM

In the poursuit of constant improvement, EFAPEL may modify the products in this catalogue without prior warning.

www.efapel.pt

Distribuitor:

EFAPEL - Empresa Fabril de Produtos Eléctricos, S.A.

Serpins, Apartado 3
3200-959 Serpins
PORTUGAL

PORTUGAL
Tel: +351 239 970 136
Fax: 800 202 344
efapel@efapel.pt

EXPORT
Tel: +351 239 970 135
Fax: +351 239 970 139
export@efapel.pt

SAT
Tel: +351 239 970 132
sat@efapel.pt